3'0 Staircase Bunk

RIGHT OPTION

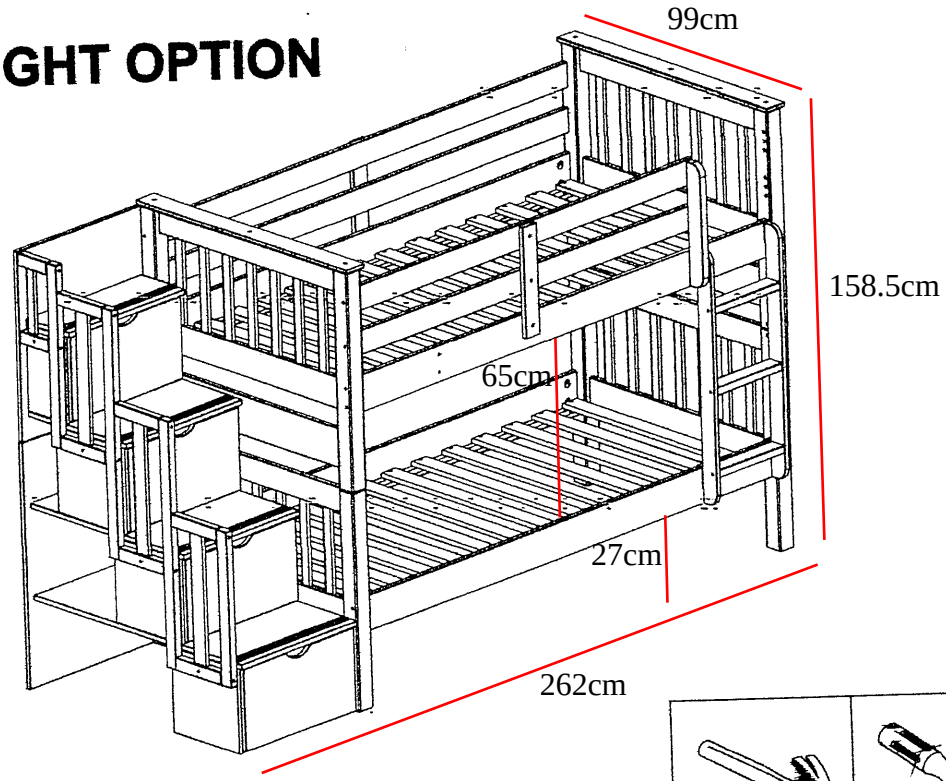

- Please assemble on a clean soft surface to avoid damage.
- Do not use power tools to assemble this product.

- Please check contents and read instructions before commencing assembly.
- Assemble this article following the enclosed instructions carefully.
- Please take care to avoid damaging panels during assembly.

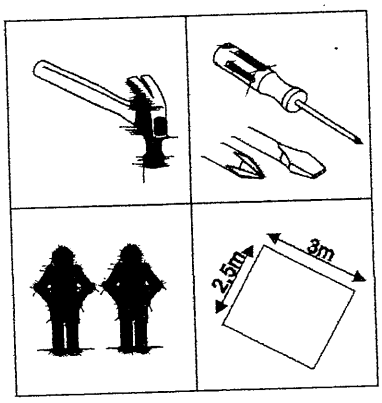

LEFT OPTION

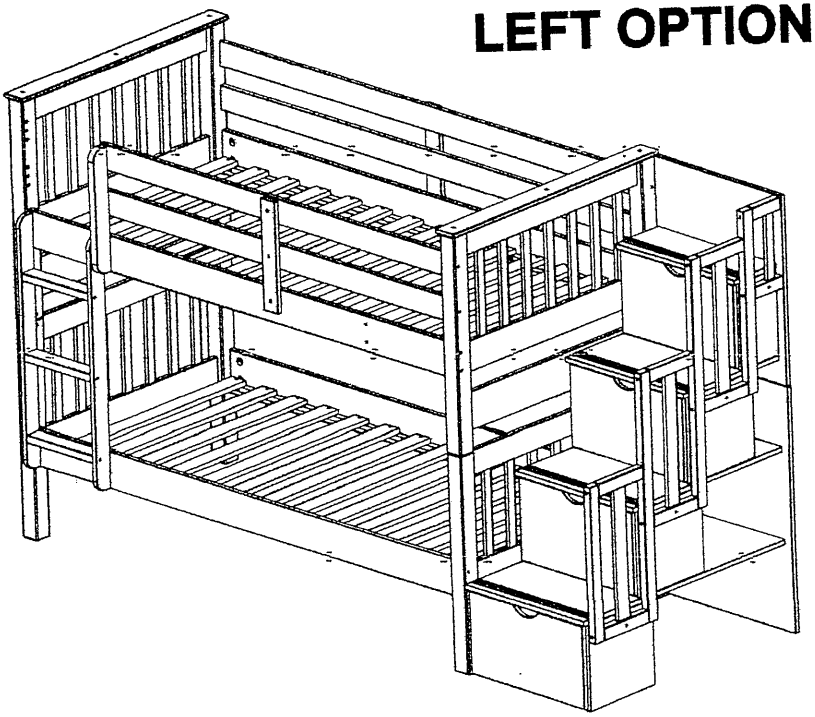

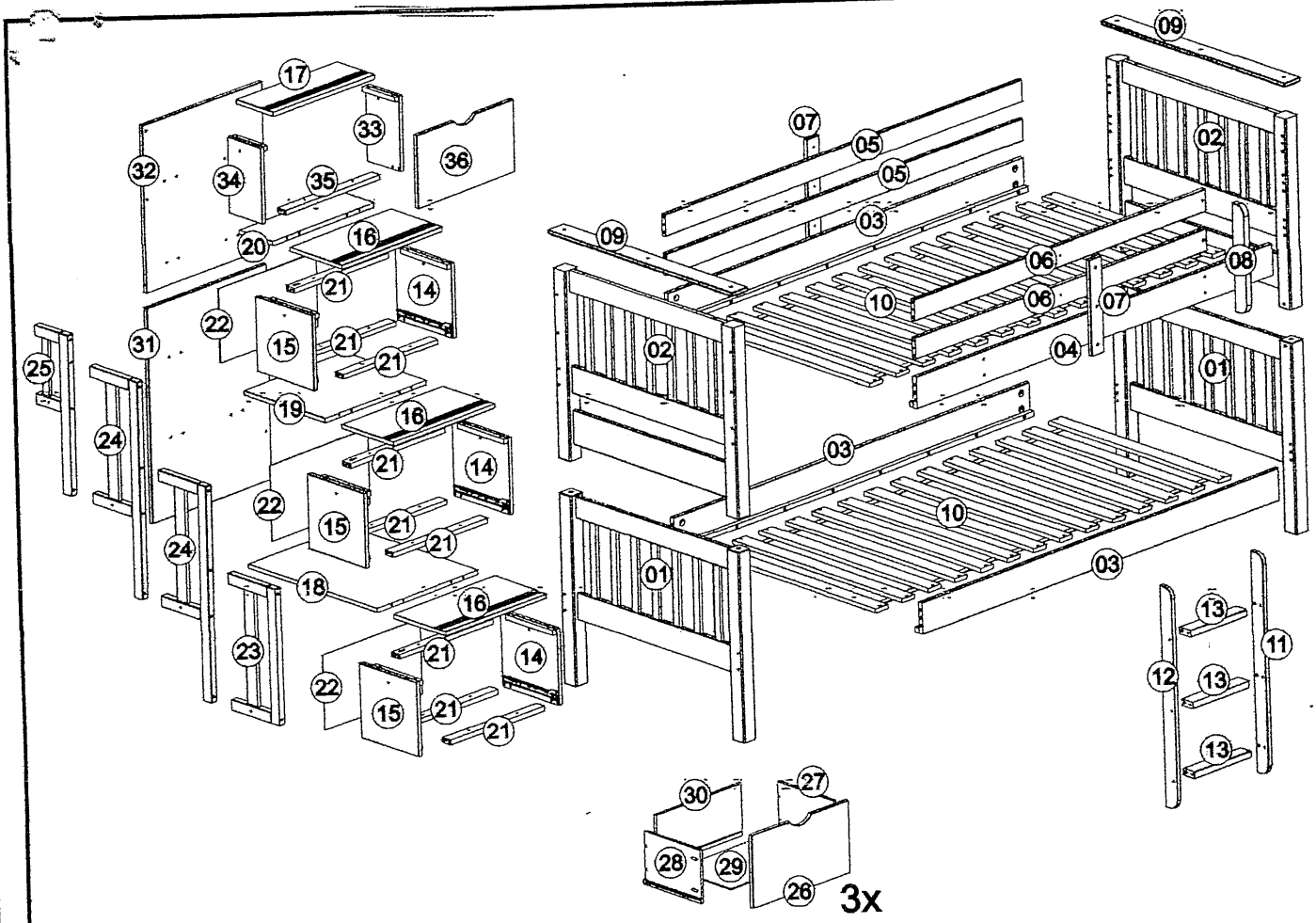

A	17mm Ø1/4 x 110mm	16
B		16
C		02
D	Ø10 x 40mm	06
E	17mm Ø7 x 100mm	06
F	Ø3,5 x 30mm	116
G	Ø15 x 90mm	04
H	Ø8 x 30mm	86
I	Ø10 x 50mm	24
J	Ø4,0 x 30mm	32
K	17mm Ø7 x 50mm	20

L	13mm Ø7 x 70mm	06
M	17mm Ø1/4 x 50mm	04
N	Ø4,0 x 40mm	04
O	10 x 10mm	42
P		04
Q	Ø4,0 x 20mm	08
R	Ø3,5 x 16mm	14
S	Ø10mm	06
T		02
U		01
V	Ø3,0 x 16mm	02

01

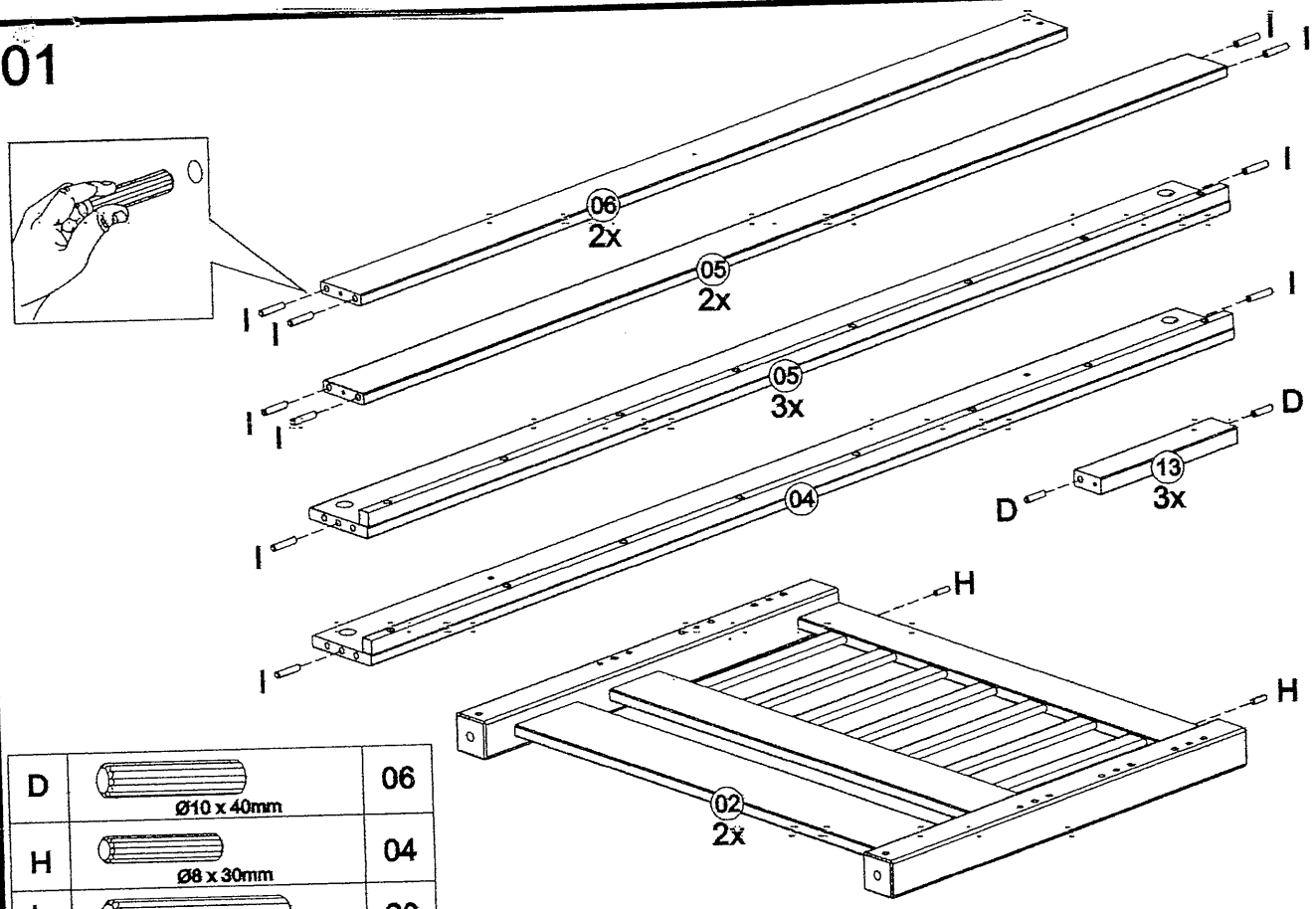

D	Ø10 x 40mm	06
H	Ø8 x 30mm	04
I	Ø10 x 50mm	20

02

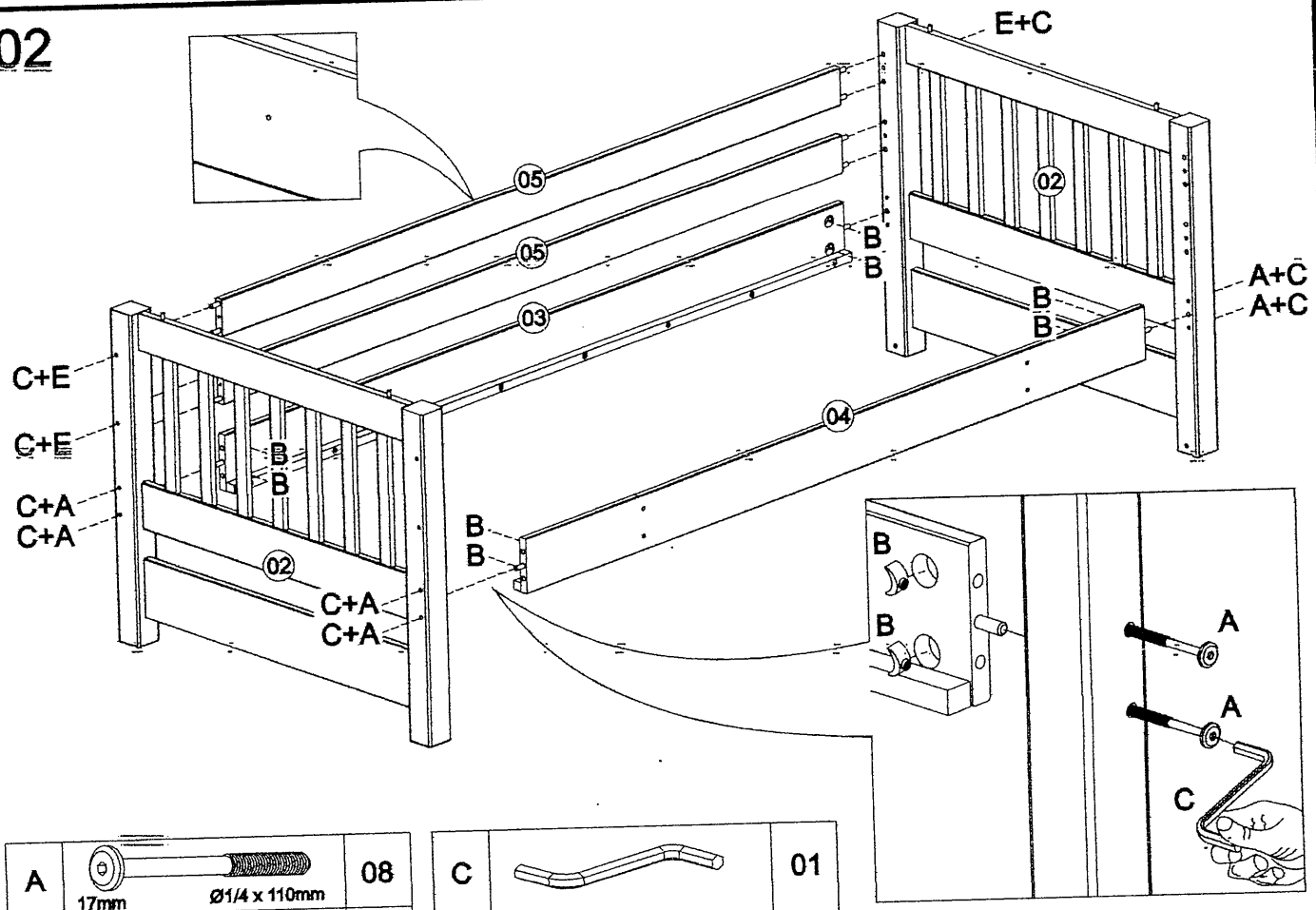

A	17mm Ø1/4 x 110mm	08
B		08
C		01
E	17mm Ø7 x 100mm	04

03

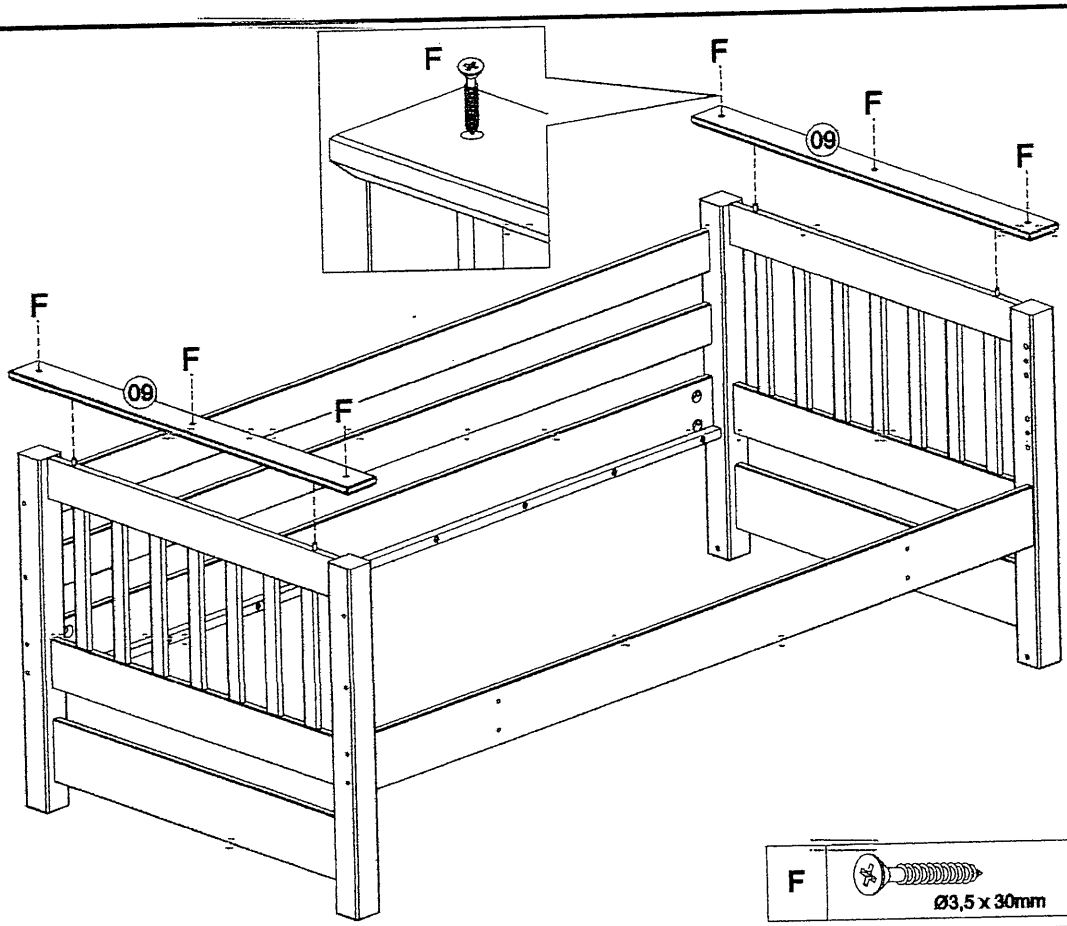

F	Ø3,5 x 30mm	06

04

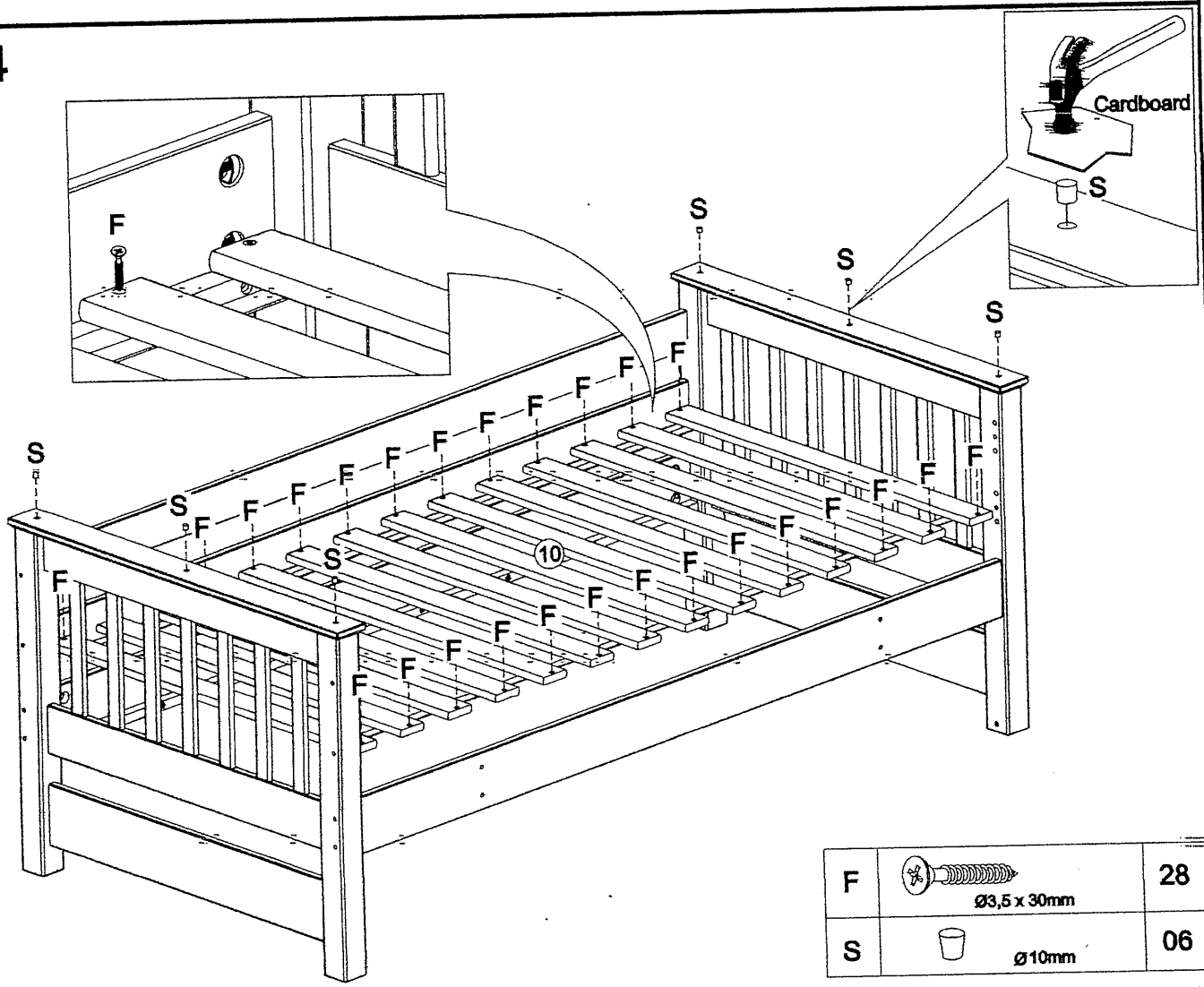

F	Ø3,5 x 30mm	28
S	Ø10mm	06

05

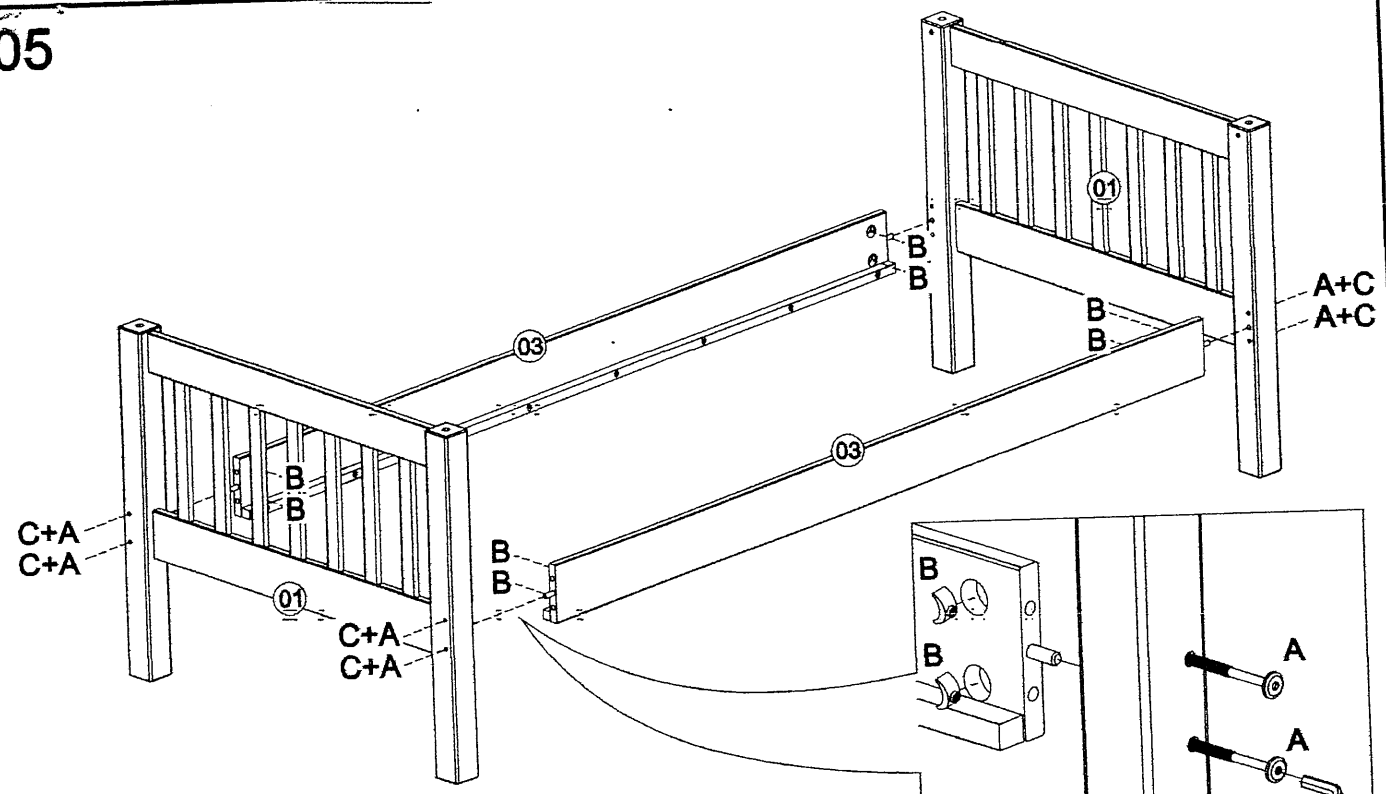

A	17mm Ø1/4 x 110mm	08
B		08
C		01

06

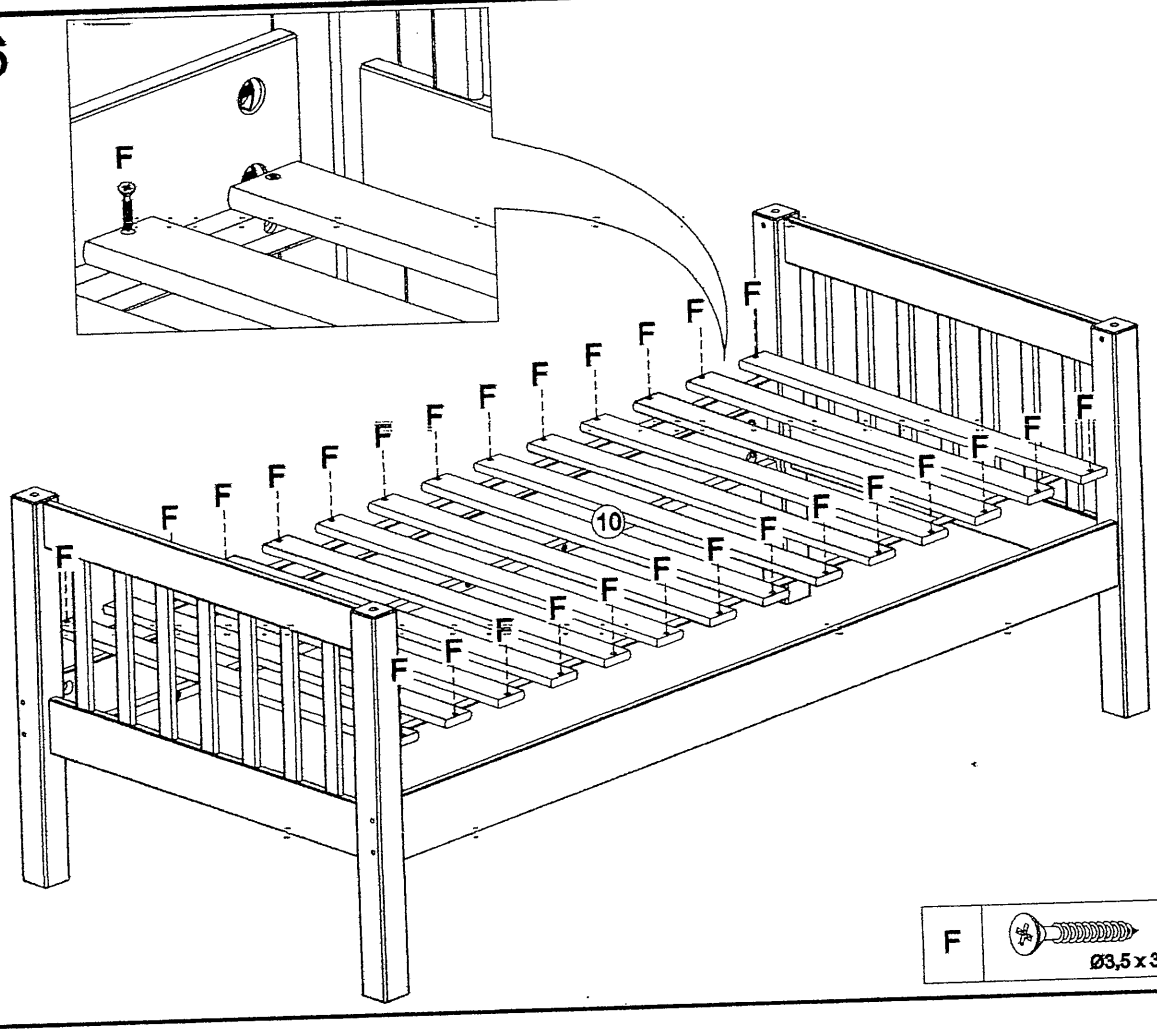

F	Ø3,5 x 30mm	28

07

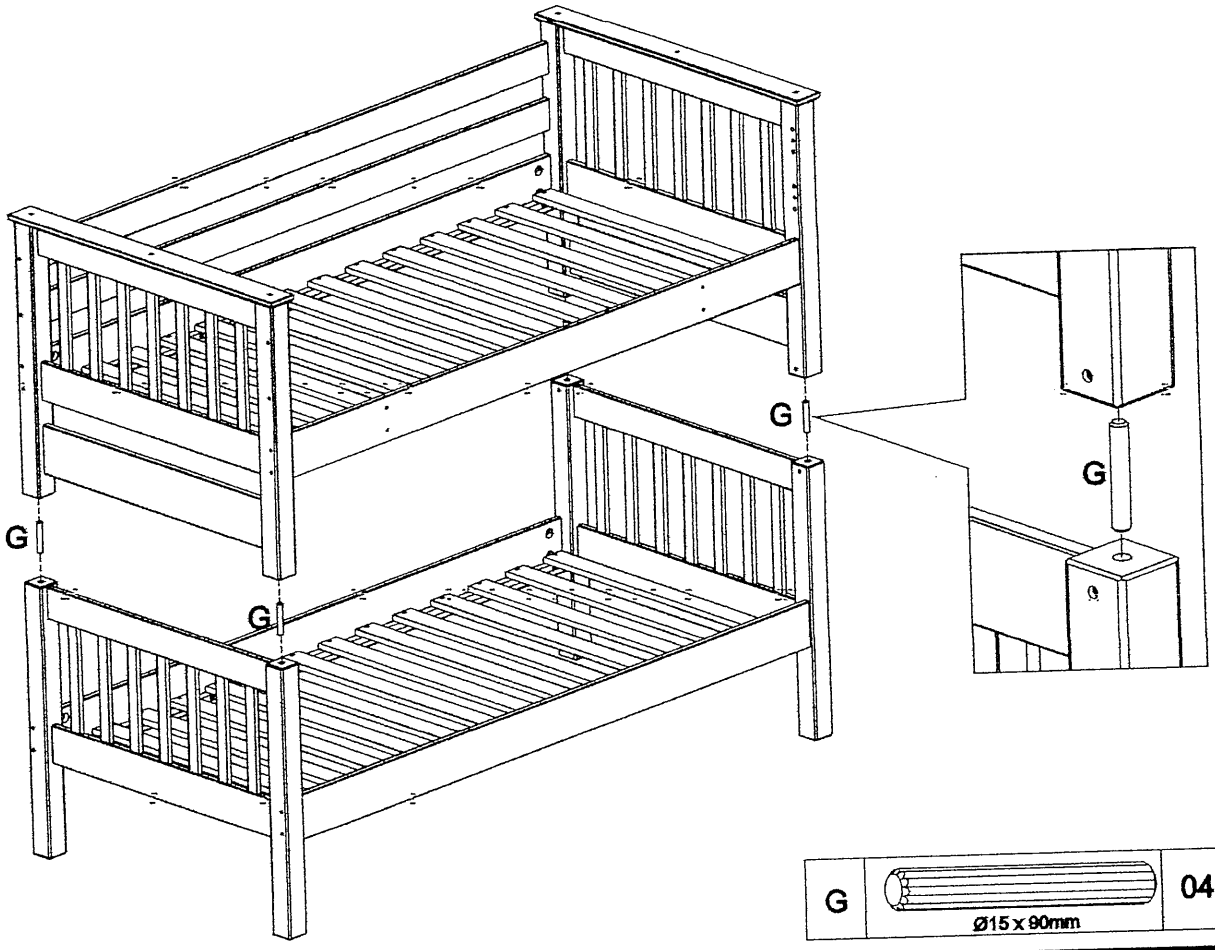

G	Ø15 x 90mm	04

08

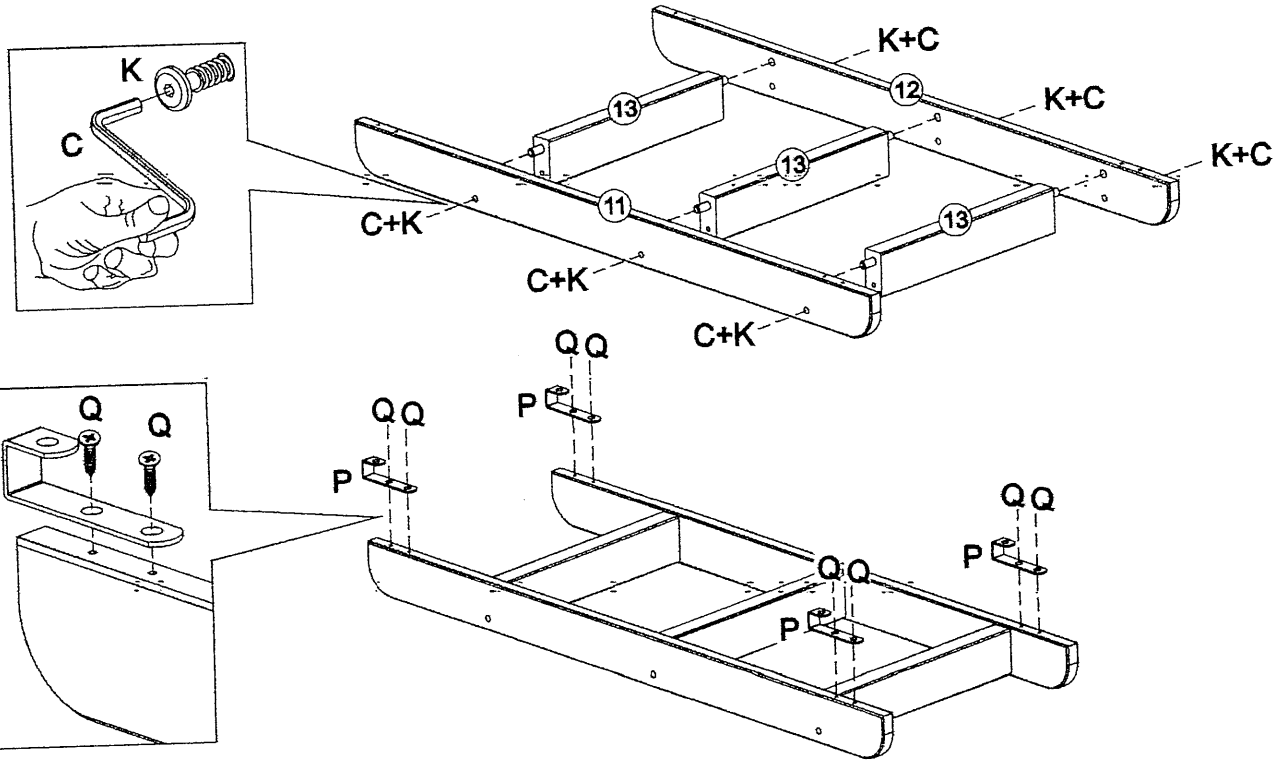

C		01
K	17mm Ø7 x 50mm	06

P		04
Q	Ø4,0 x 20mm	08

09

C+K
C+K
C+K
C+K
06
06
08
C+E
C+E
F
F
F
F
F
F

RIGHT OPTION

F
F

C		01
E	17mm Ø7 x 100mm	02
F	Ø3,5 x 30mm	08
K	17mm Ø7 x 50mm	04

10

F
07
F
F
F
F
07
F

F	Ø3,5 x 30mm	06

11

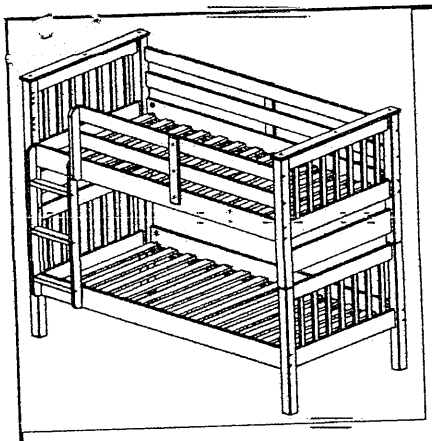

LEFT OPTION

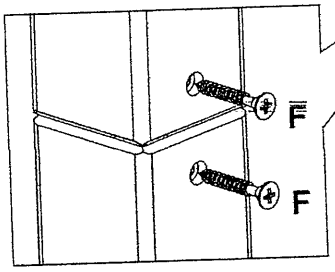

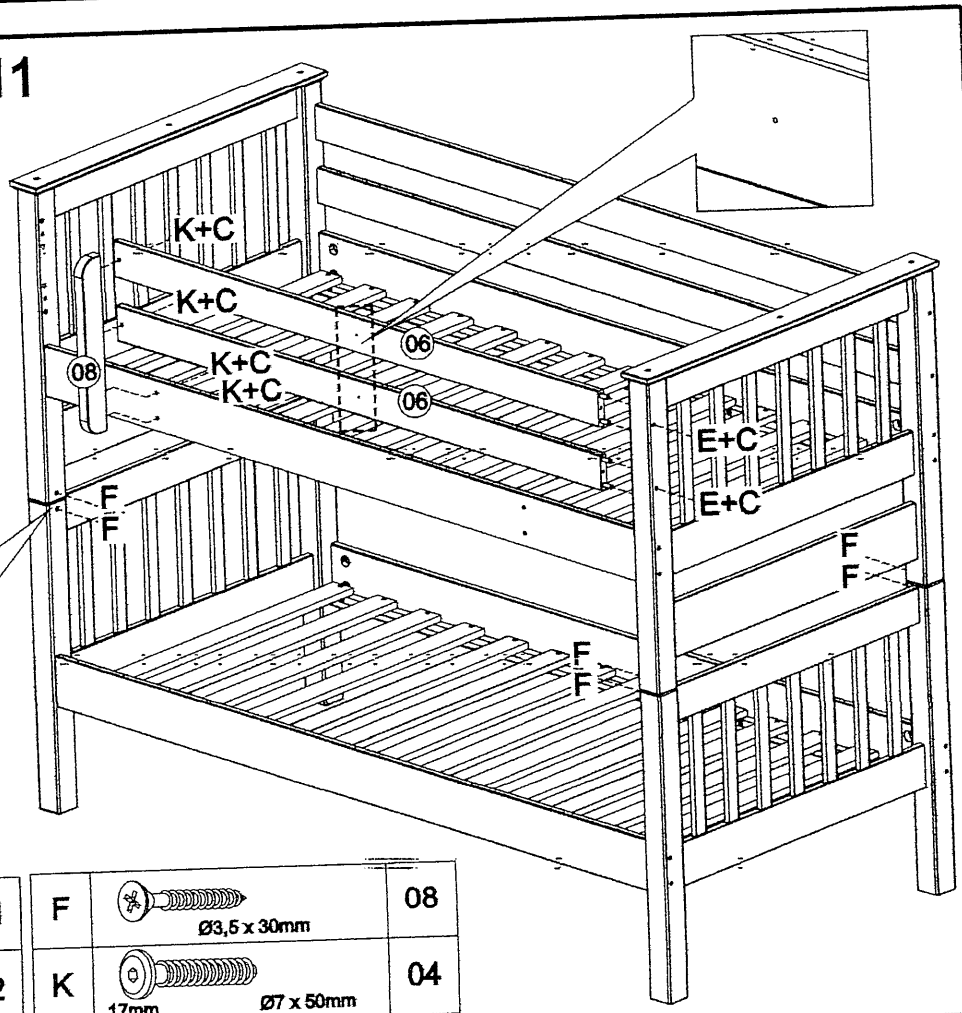

C		01
E	17mm Ø7 x 100mm	02
F	Ø3,5 x 30mm	08
K	17mm Ø7 x 50mm	04

12

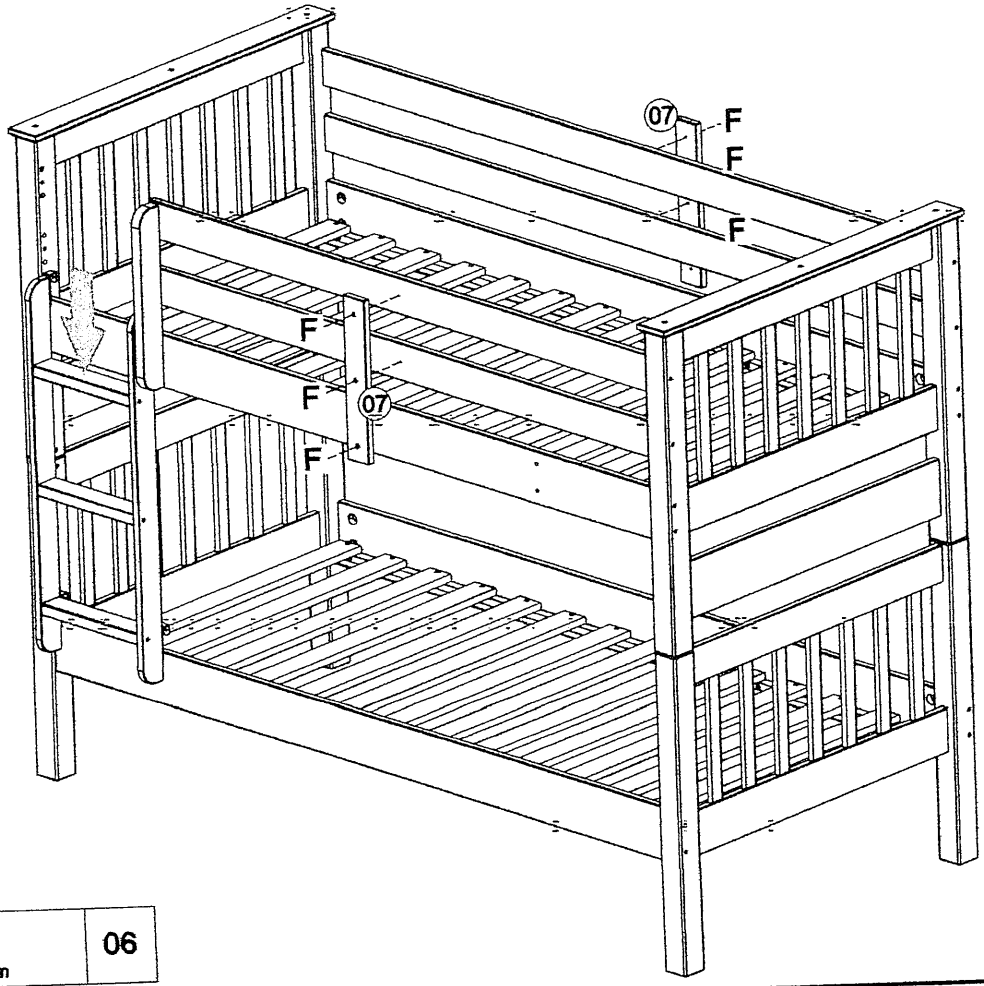

F	Ø3,5 x 30mm	06

13

H	Ø8 x 30mm	82
I	Ø10 x 50mm	04
R	Ø3,5 x 16mm	10
T		02
U		01
V	Ø3,0 x 16mm	02

14

F	Ø3,5 x 30mm	04
J	Ø4,0 x 30mm	02

15

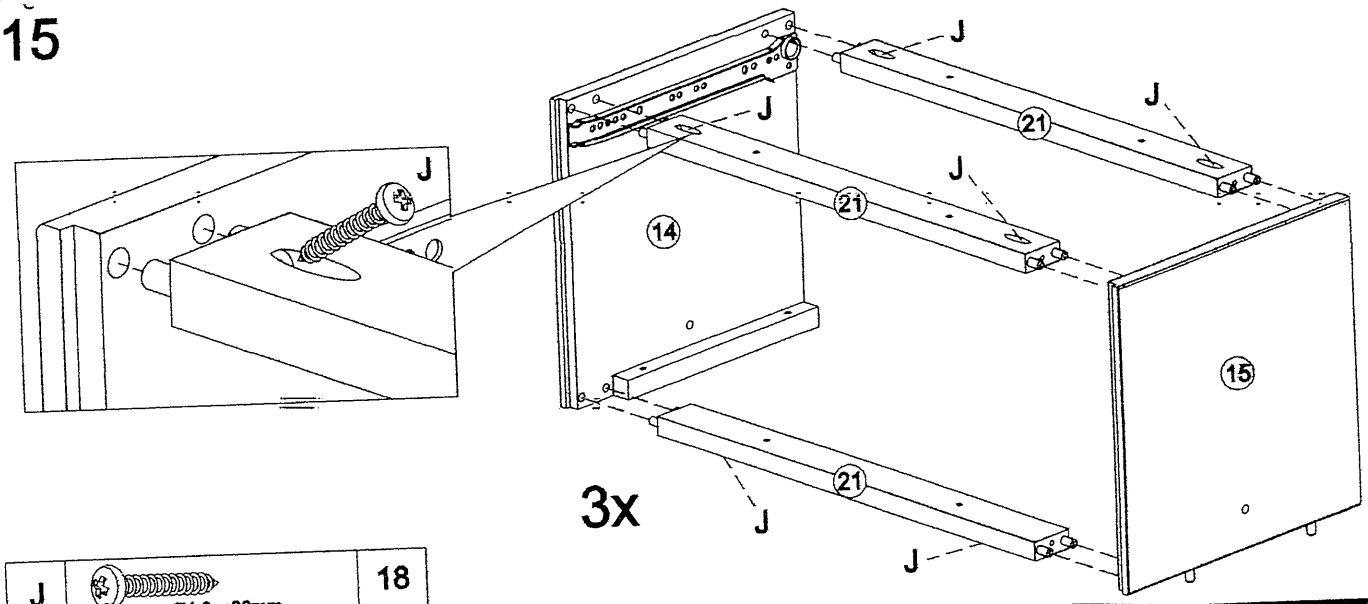

J	Ø4,0 x 30mm	18

16

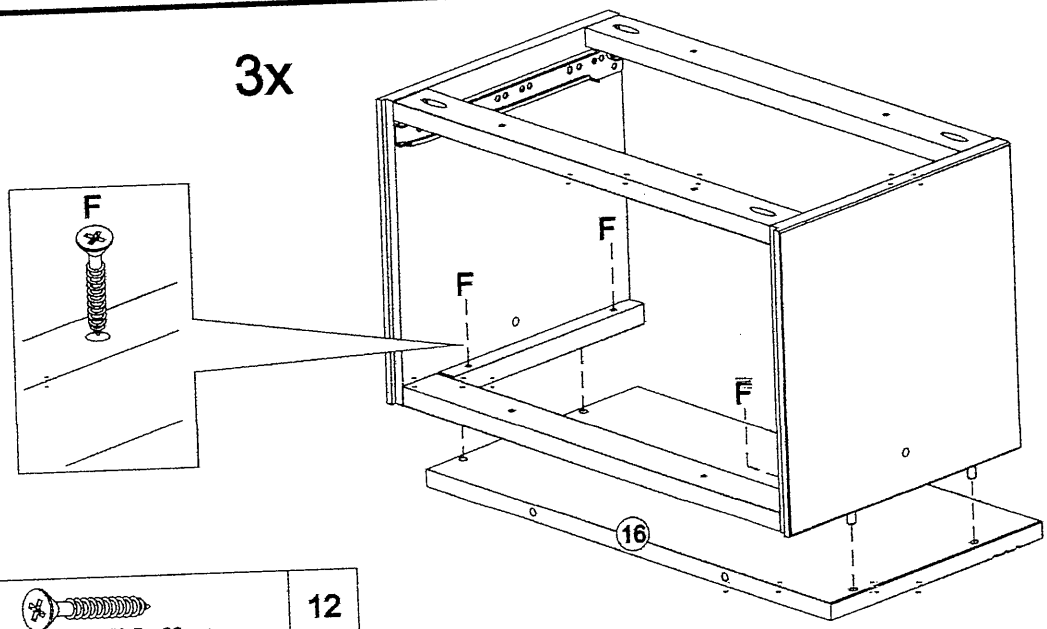

F	Ø3,5 x 30mm	12

17

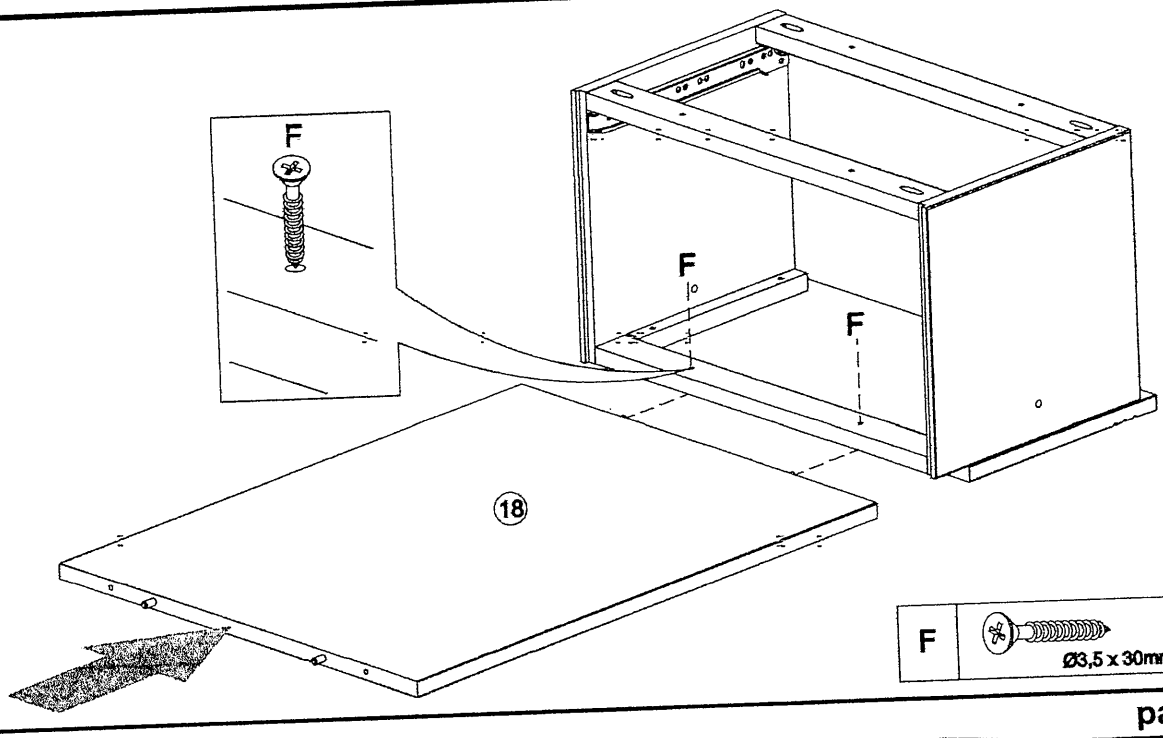

F	Ø3,5 x 30mm	02

18

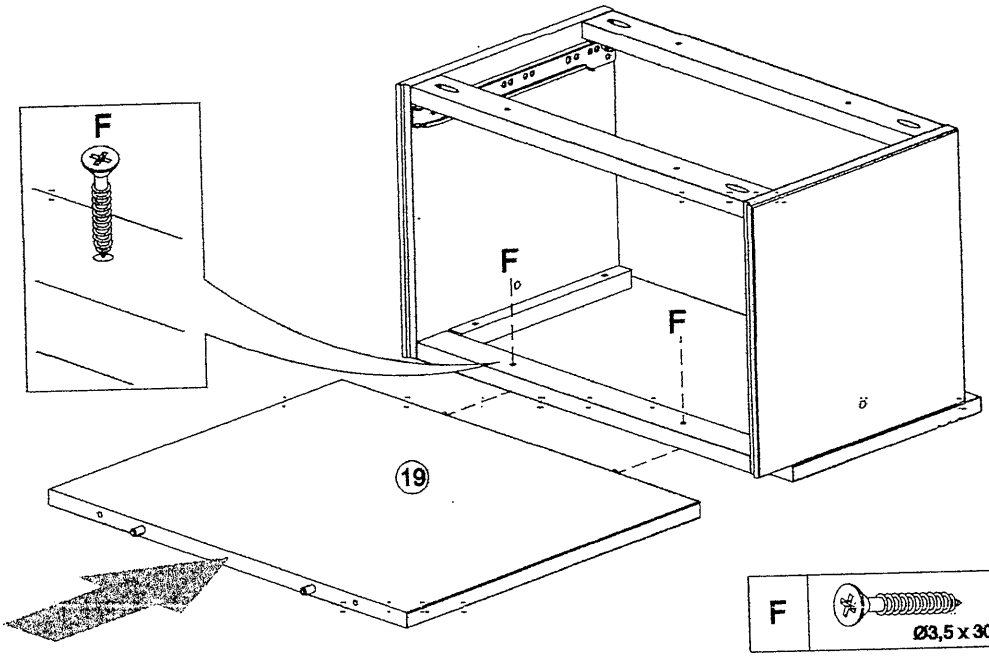

F	Ø3,5 x 30mm	02

19

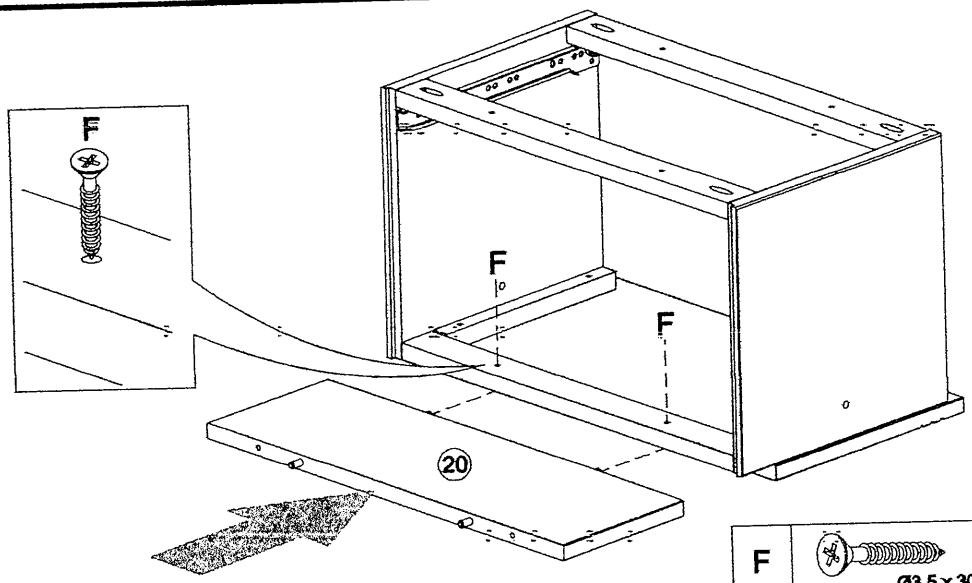

F	Ø3,5 x 30mm	02

20

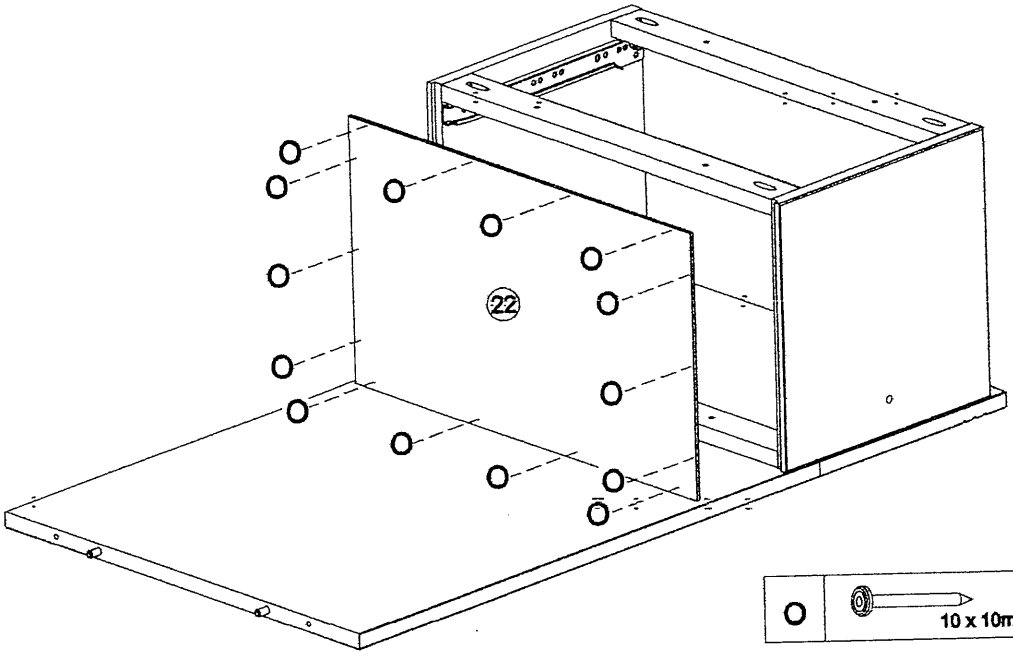

O	10 x 10mm	14

21

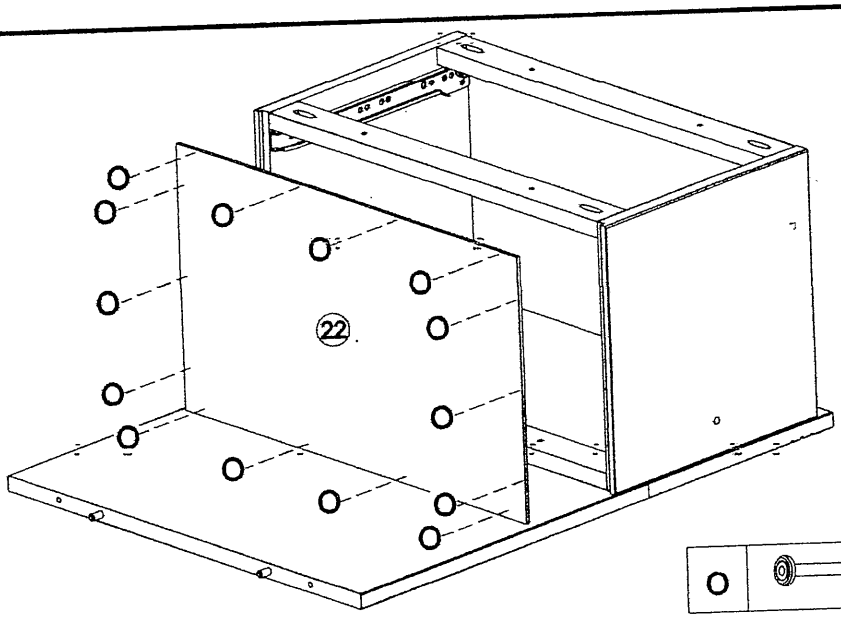

O	10 x 10mm	14

22

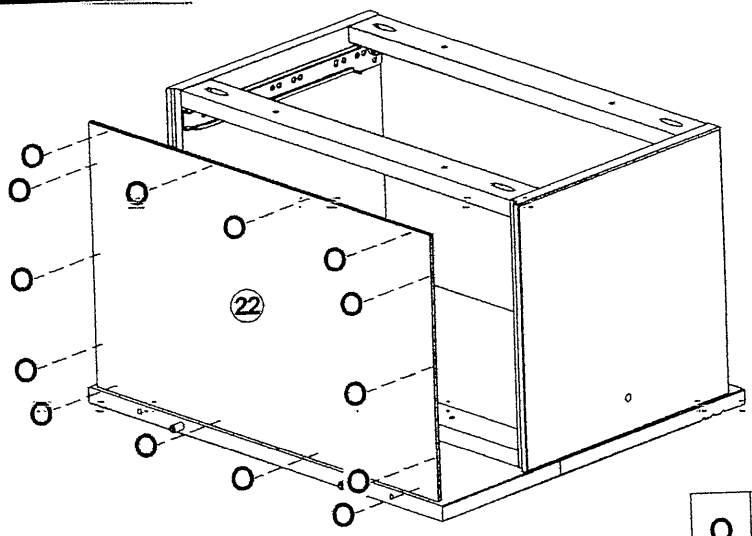

O	10 x 10mm	14

23

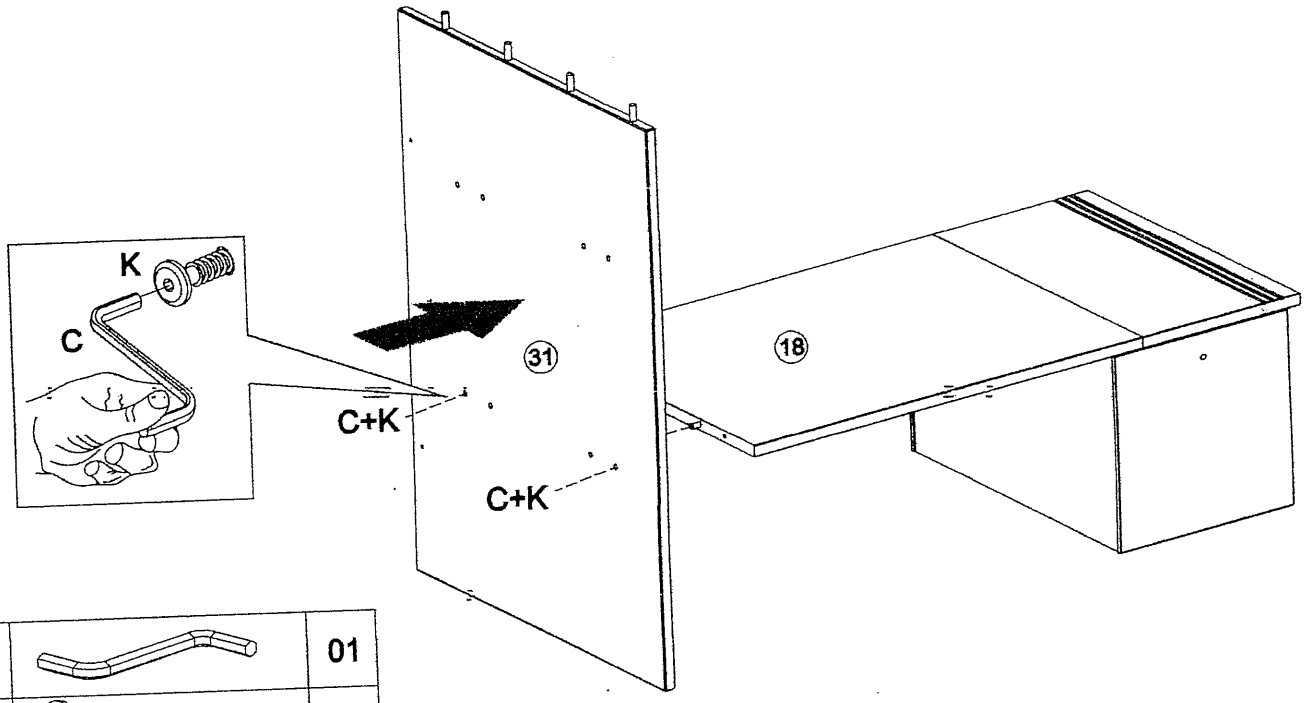

C		01
K	17mm Ø7 x 50mm	02

24

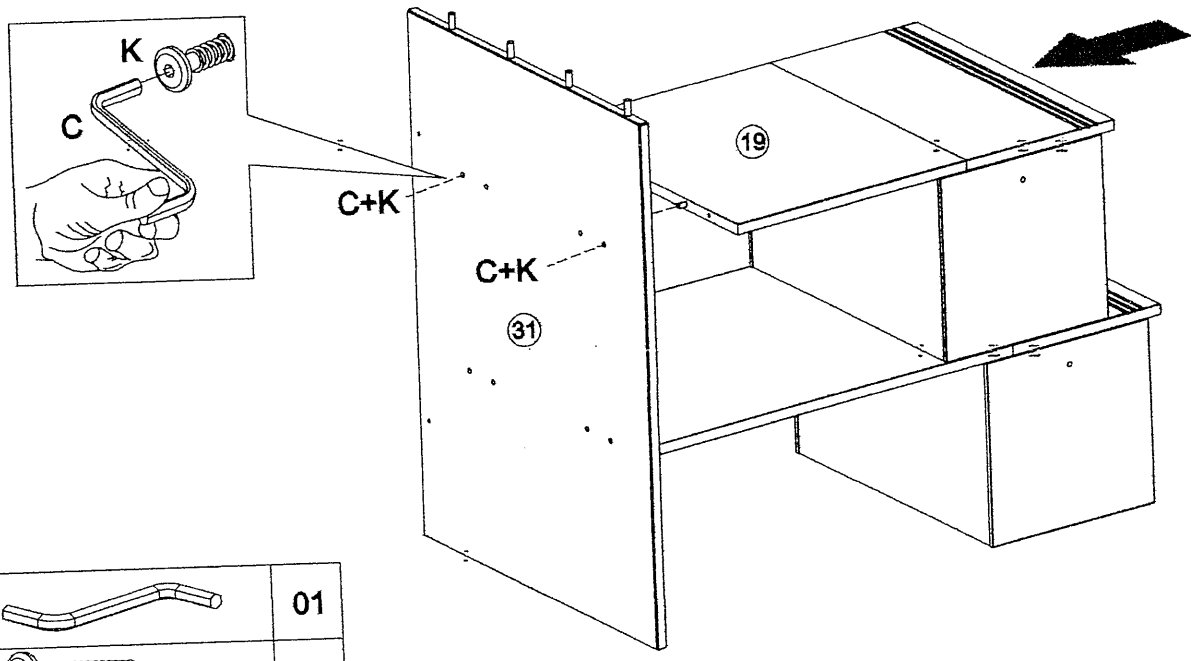

C		01
K	17mm Ø7 x 50mm	02

25

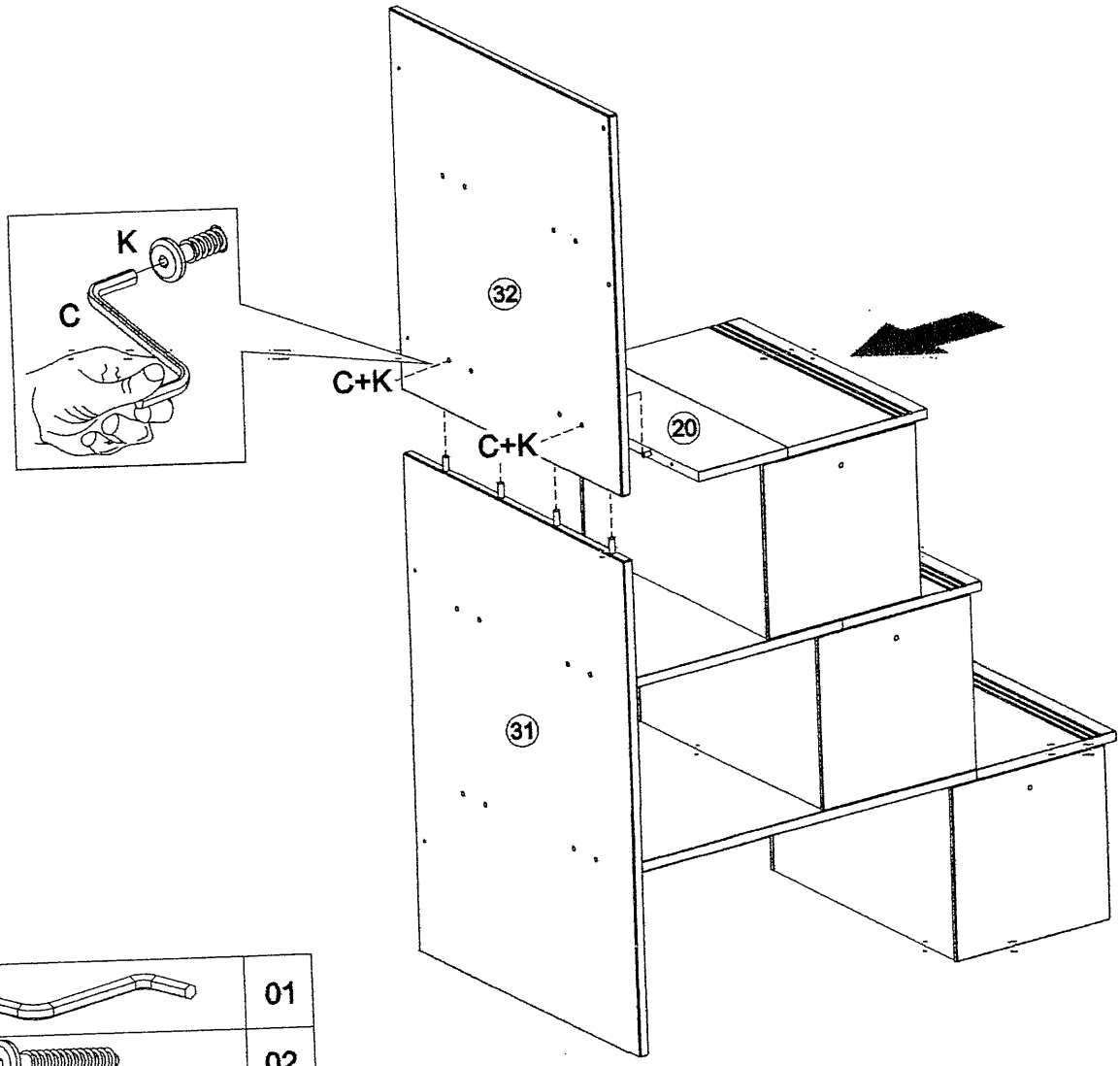

C		01
K	17mm Ø7 x 50mm	02

26

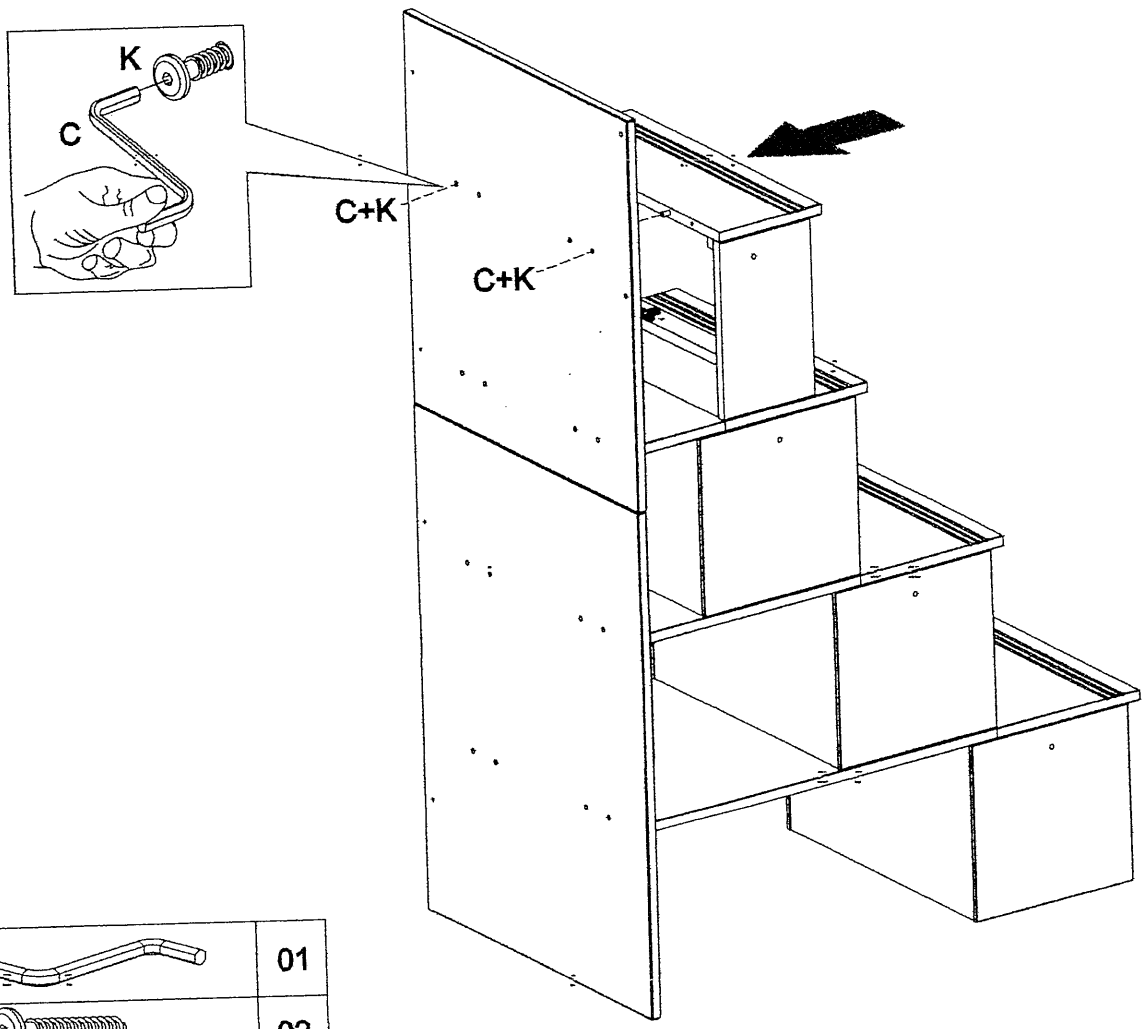

C		01
K	17mm Ø7 x 50mm	02

27

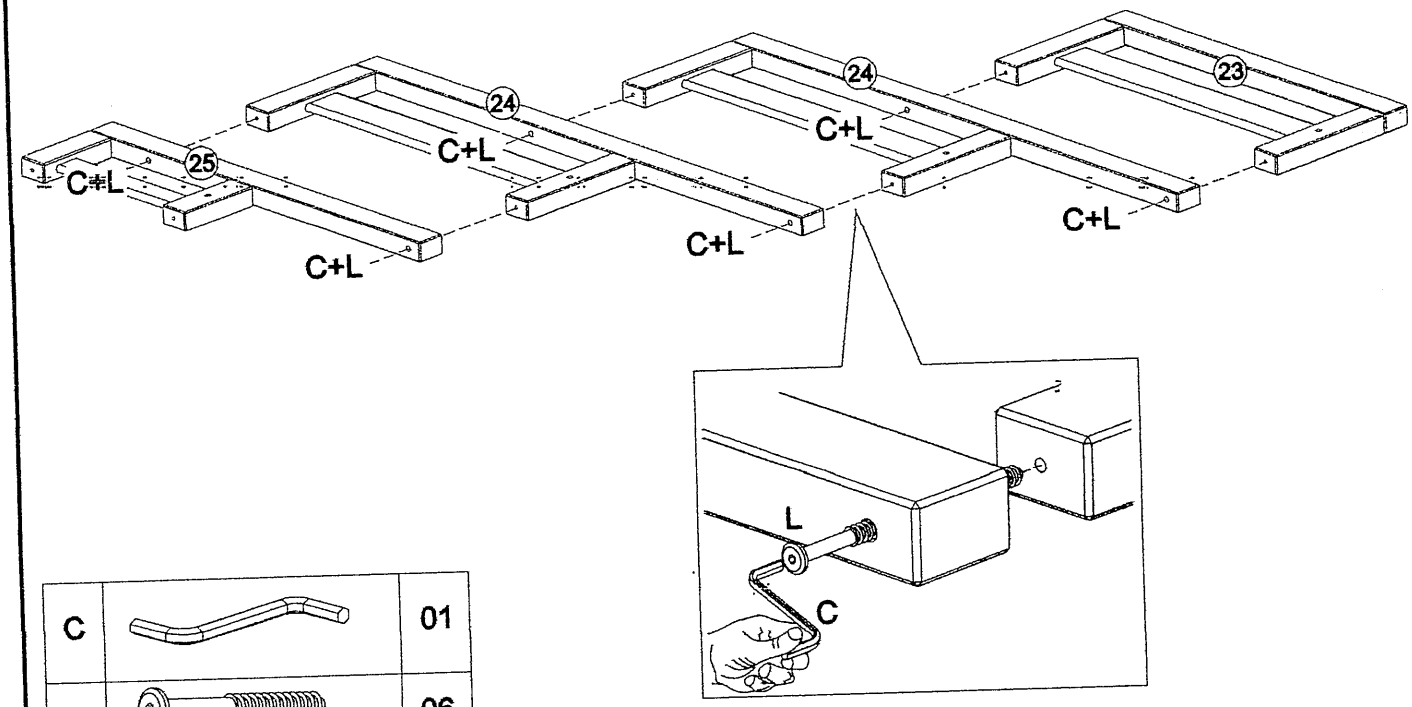

C		01
L	13mm Ø7 x 70mm	06

28

3x

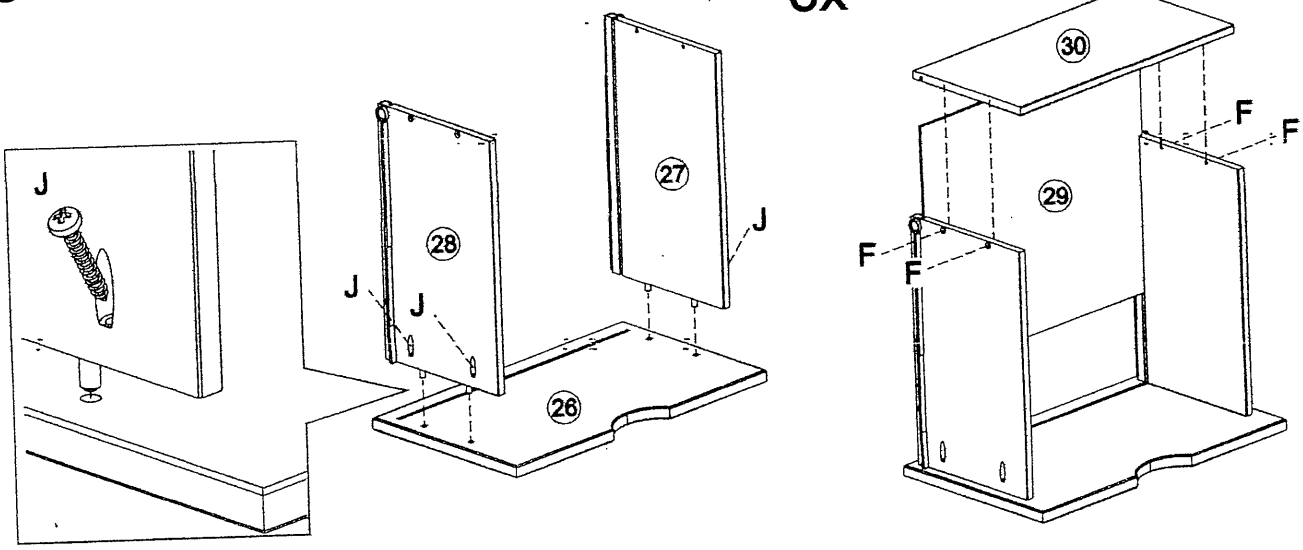

F	Ø3,5 x 30mm	12
J	Ø4,0 x 30mm	12

29

RIGHT OPTION

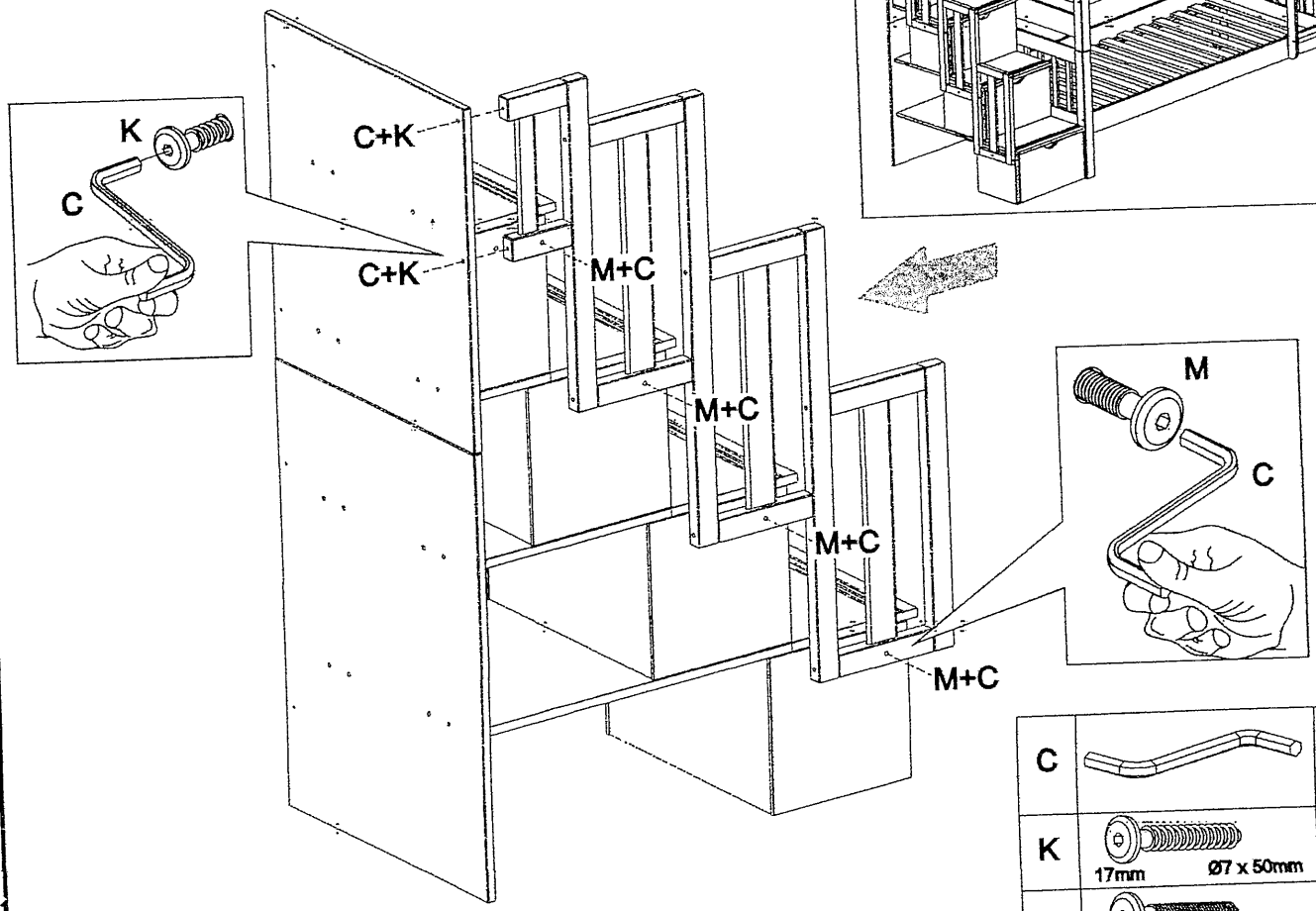

C		01
K	17mm Ø7 x 50mm	02
M	17mm Ø1/4 x 50mm	04

30

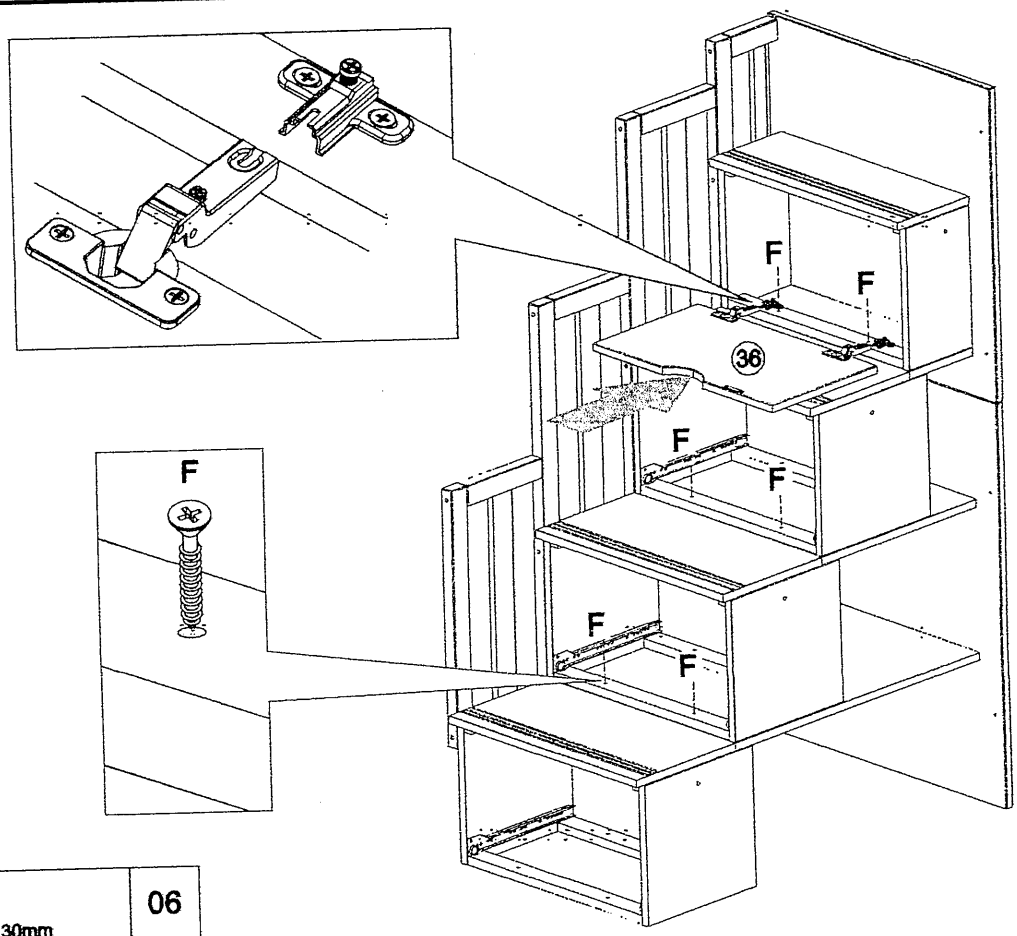

F	Ø3,5 x 30mm	06

31

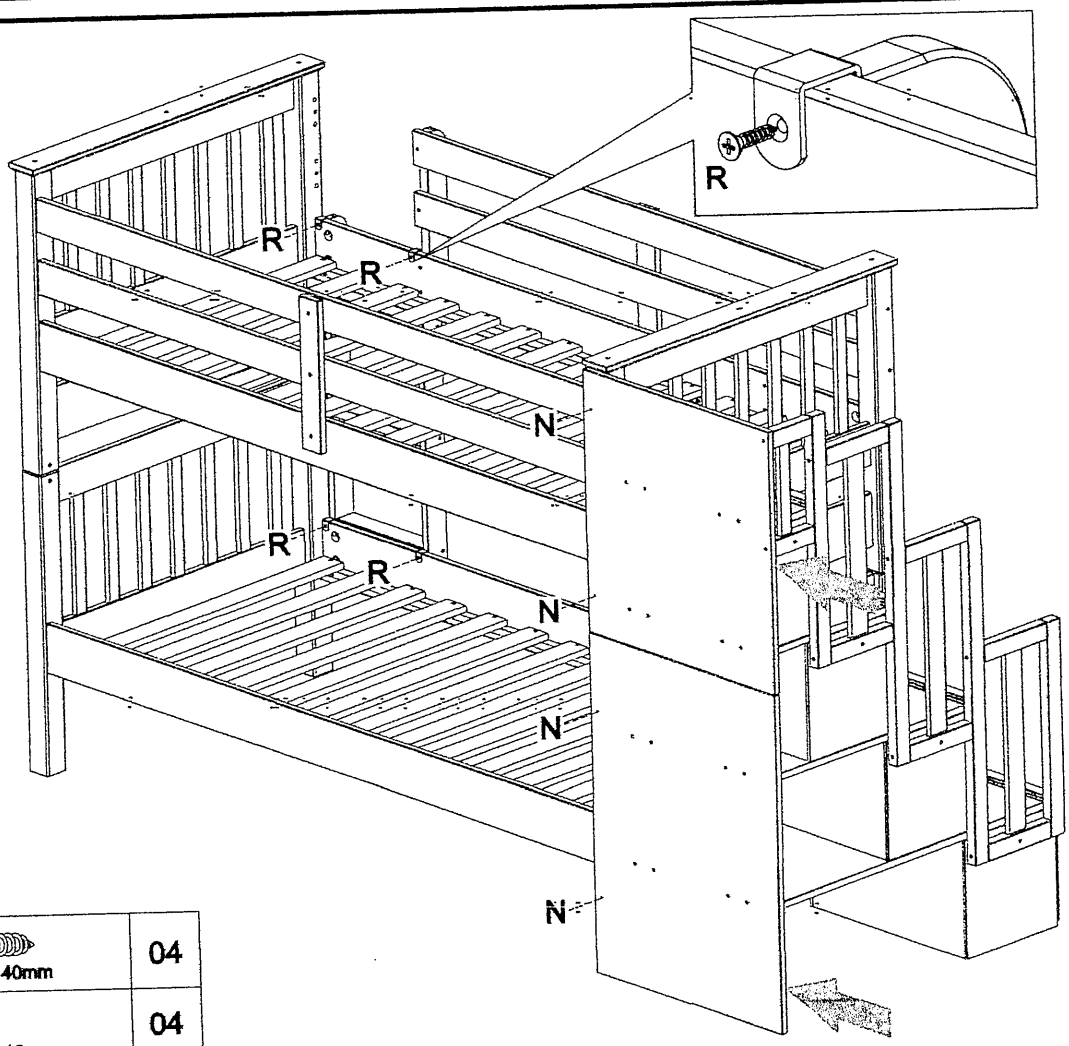

N	Ø4,0 x 40mm	04
R	Ø3,5 x 16mm	04

32

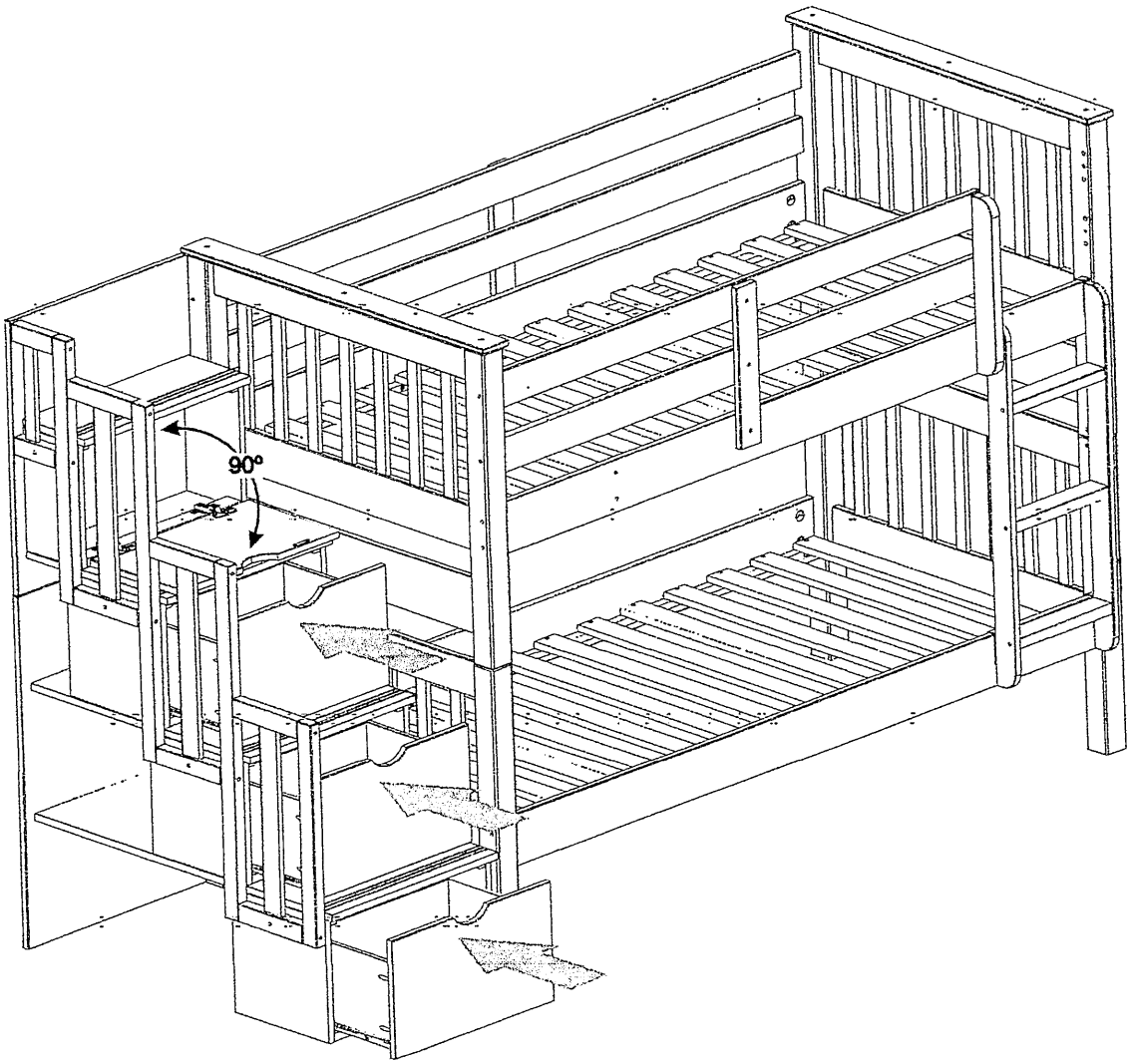

33 LEFT OPTION

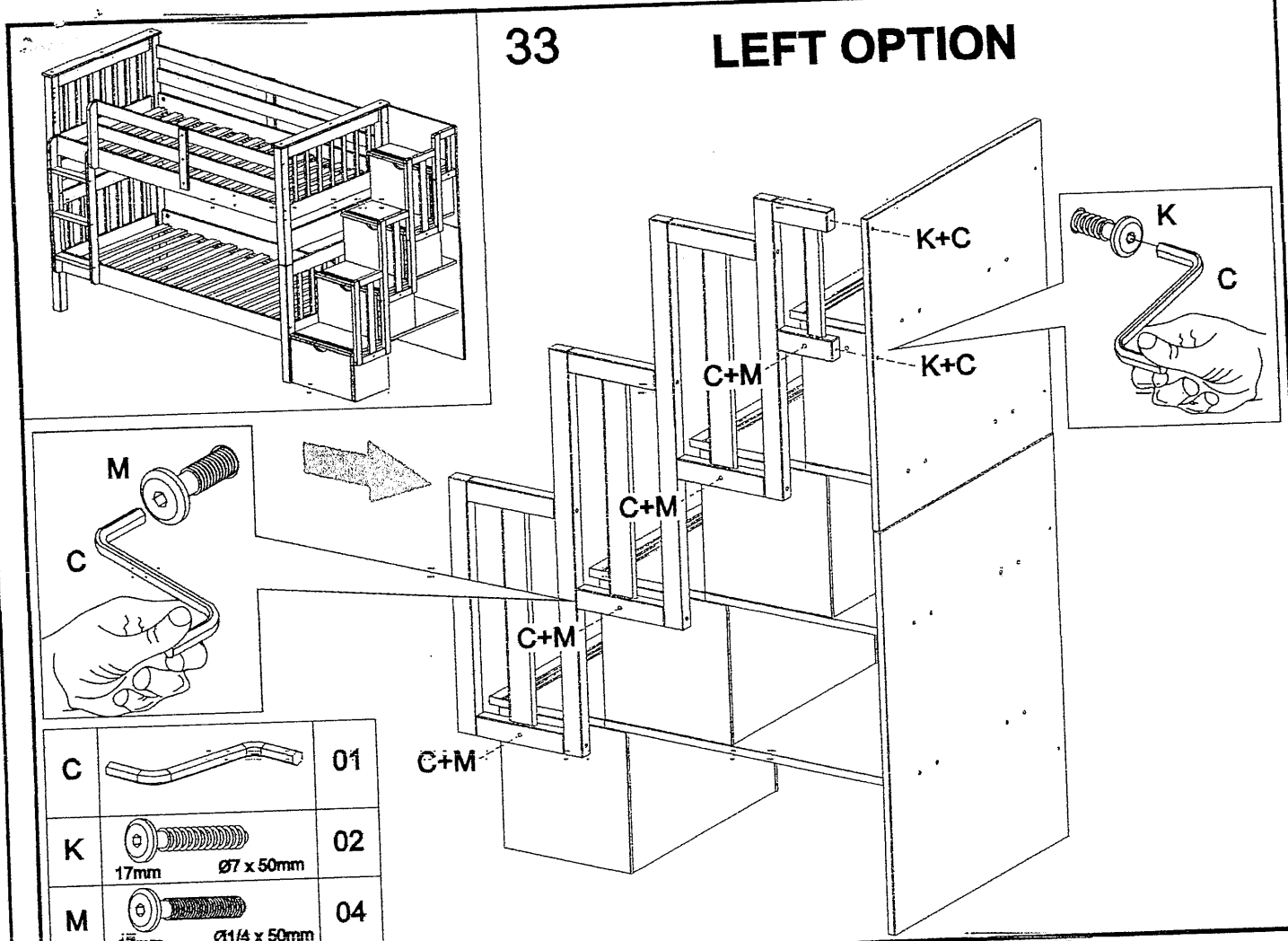

C		01
K	17mm Ø7 x 50mm	02
M	17mm Ø1/4 x 50mm	04

34

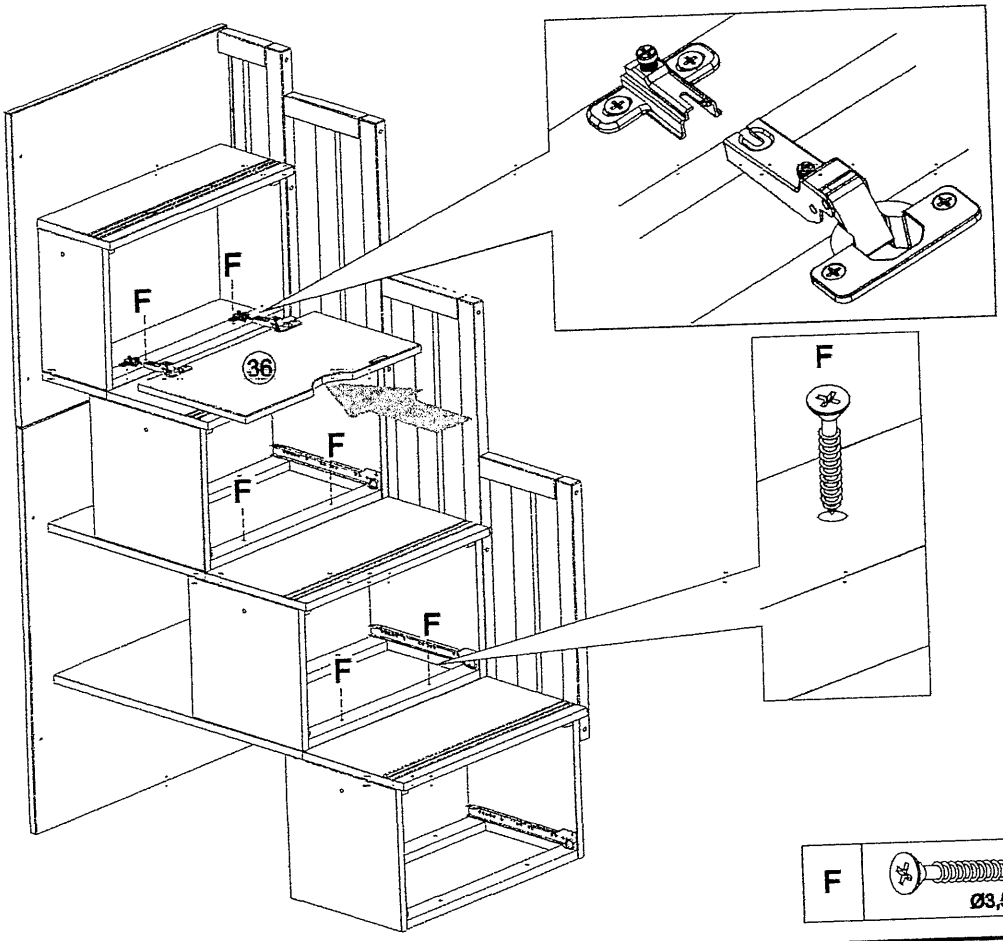

F	Ø3,5 x 30mm	06

35

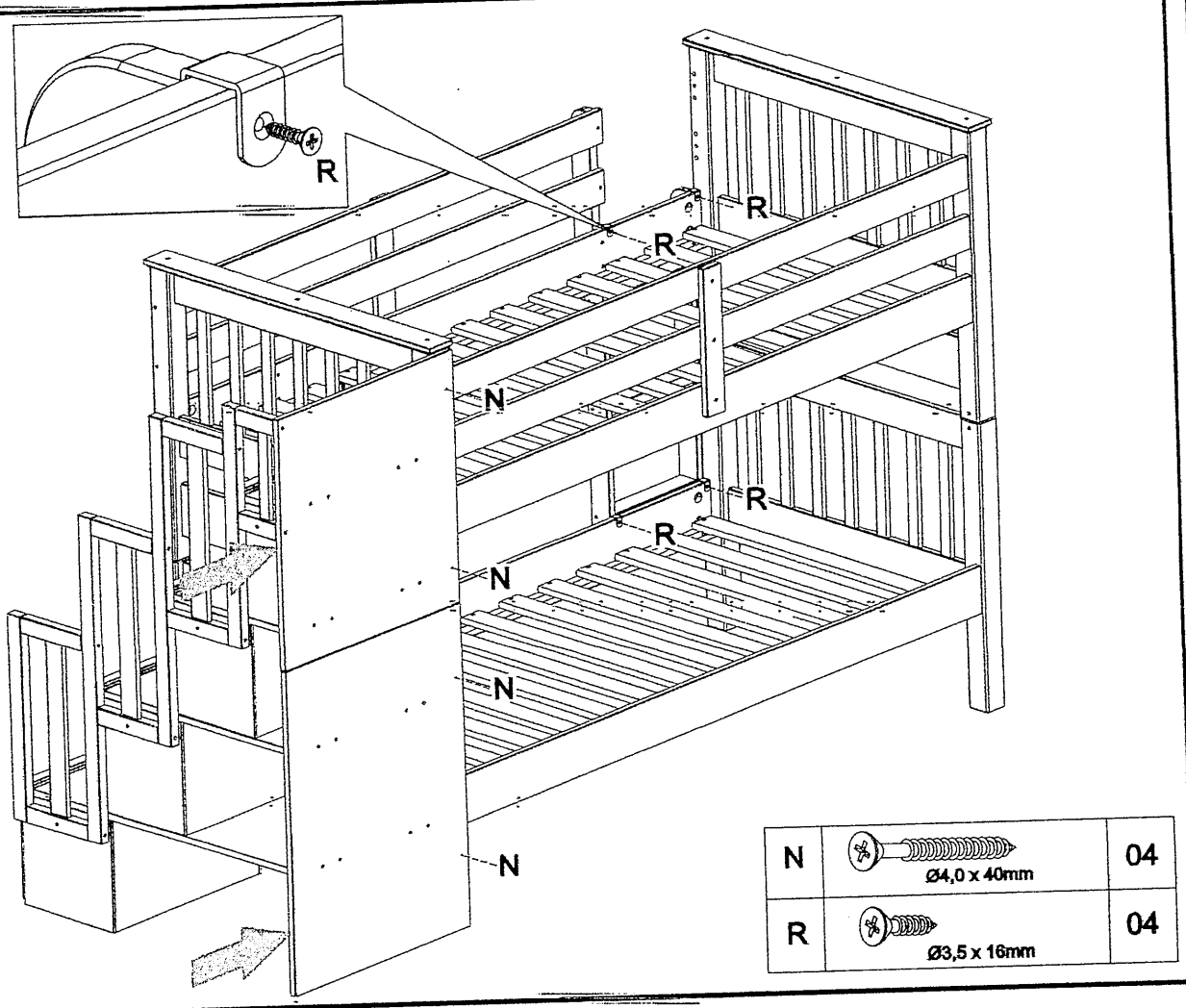

N	Ø4,0 x 40mm	04
R	Ø3,5 x 16mm	04

36

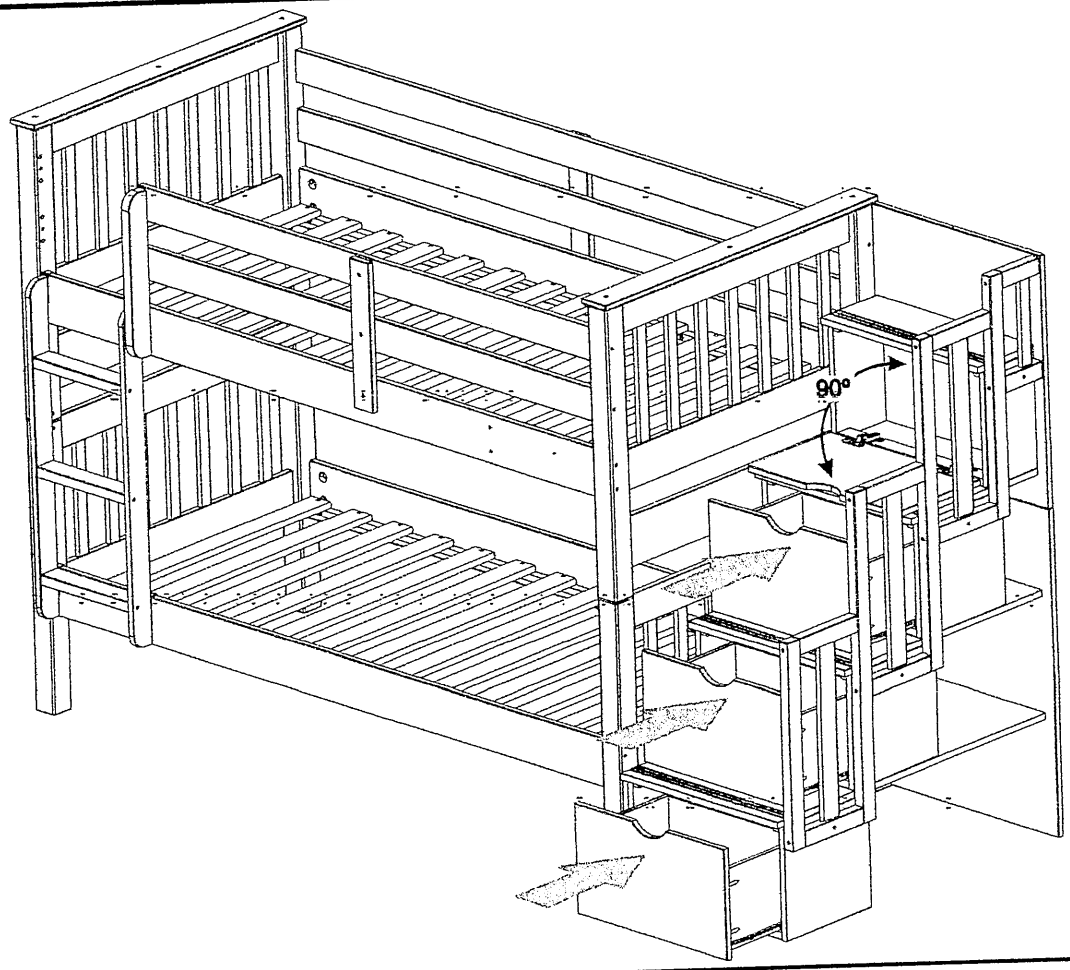

AMANI INTERNATIONAL LTD

STAIRCASE BUNK BED ASSEMBLY INSTRUCTIONS
TOOLS REQUIRED; Hammer, Crosshead Screwdriver and Alan Key (supplied).

BE CAREFUL WHEN OPENING THE CARTON NOT TO DAMAGE THE CONTENTS.
PLEASE CHECK THE HARDWARE AGAINST THE LIST ON PAGE 2/13

Refer to page 2/13 for part numbers and hardware list.

Fig 1) Indentify 2 x guard rails (05) 2 x guard rails (08) 3 x side rails (04) 1 x side rail (9) locate dowels (D) into the ends as shown.

LOWER BED ASSEMBLY

Fig 02) Identify two lower ends 2 x 01 - each having dowel holes in the top of the leg. Position 4 x halfmoon nuts (B) into each of the side rails (04). Locate the rails (04) into the head ends and screw together with the bolts (A) using (C)
Fig 03) Place the slats (06) onto the cleats, space them out using the spacer (I) and screw to the cleat using screws (F).

TOP BUNK ASSEMBLY

The staircase unit may be positioned either end of the bed, be sure to leave the gap at the end of the short guard rails on the end you require entry to the upper bunk.
Fig04) Position 4 x half moon nuts (B) into the side rails (04) and (09). Locate the rails (04) and (09) into the head ends (02) and (03) screw together with the bolts (A) using (C) **Do not tighten the bolts.** Position the two long guard rails (05) into the end frames and screw together using screws (E) with (C). **Tighten all bolts**. Position 2 x short guard rails (08) to the end frame and screw to the posts using screws (E) using (C). Line up the vertical guard rail support (28) and screw to the side rail (09) and the 2 short guard rails (08) with screws (K) using (C) NB Ensure that the smaller margin of the two pilot holes drilled at each end is positioned to the top guard rail. Tighten all remaining bolts and screws.
Fig 05) Place the slats (06) onto the cleats, space them out using the spacer (I) and screw to the cleat using (F).
Fig 06) Position 2 x guard rail supports (07) to the pilot holes and screw together with (F). Locate 4 x dowels (G) into the top of each leg. Position the top bunk onto the lower bunk by lining up the dowel holes with the dowels. Secure the top frame to the lower frame with screw (F) into the pre-drilled holes in each leg.

STAIRCASE ASSEMBLY

Fig 07) Locate all dowels (H) into the panels 3 x (18), 3 x (19), 3 x (24), 3 x (23) 1 x (16) 1 x (15) 1 x (14) all dowels (D) into panel 1 x (10) and dowels (H) into rails 09 x (20).

Fig (08) Make up three boxes by positioning 3 x rails (20) to panels (18) and (19) and screw together with screws (J).

Fig 09) Position and screw together with screws (F) panel (16) to make one box.

Fig 10) Position and screw together with screws (F) panel (17) to make one box. NOW REPEAT.

Fig 11) Position and screw together with screws (F) panel (14) to one box.

Fig 12) Position and screw together with screws (F) panel (15) to one box.

Fig 13) Position back panel (21) to the rebate and secure using nails (0) x 10.

Fig 14) Position back panel (21) to the rebate and secure using nails (0) x 10.

Fig 15) Position panel (10) to panel (14) (attached to the bottom stair) using screw (K) with (C).

Fig 16) Position middle stair onto the bottom stair, locate panel (15) to panel (10) screw together with screw (K) using (C).

Fig 17) Position panel (27) onto the edge of panel (10), position top stair onto the middle stair locating the dowels in the top stair panel into the pre-drilled holes in panel (27). Secure the stair to the panel with screw (K) using (C).

Fig 18) Secure the top stair to the middle stair and the middle stair to the bottom stair with screws (F) through the pre-drilled holes in the rails.

DRAWER ASSEMBLY x 3

Fig 19) Lay the drawer fronts (22) face down, position the drawer sides (23) and (24) to the drawer front ensuring the grooves for the drawer bottoms are in line, screw together with (J). Slide the drawer bottoms into the grooves then locate drawer back and screw together with screws (F).

Fig 20) Screw hand rail frames (11) (12) and (13) together with screws (L) using (C).

Fig 21) Position the frame and locate screws (M) through the frame and into the pre-positioned t-nuts in the sides of the stairs. Secure the top hand rail to panel (27) with screws (K) using (C).

Fig 22) Position the staircase to the bunk frame and secure with Screws (N).

Fig 23) Insert all three drawers into each compartment.

Ensure all screws and bolts are tightened.

MANUFACTURERS WARNING

CHECK THE BUNK REGULARLY FOR STABILITY AND TIGHTEN IF NECESSARY. IF ANY PART SHOULD BECOME DEFECTIVE DO NOT USE SUBSTITUTES - CONTACT YOUR RETAILER FOR THE CORRECT REPLACEMENT PARTS.

CHILDREN MUST NOT BE ALLOWED TO USE THE BUNK AS A CLIMBING FRAME AND THE TOP BED MUST NOT BE USED BY CHILDREN UNDER THE AGE OF SIX. BE AWARE OF DANGER OF YOUNG CHILDREN (UNDER 6) FALLING FROM THE TOP BUNK.

COMPLIANCE TO EN747-1 HAS BEEN MET

Position 8 x half moon nuts (B) into each end of the long guard rails and one end of the short guard rails. Locate the rails into the head ends and screw together with the bolts (A) using (C) Position a nd screw the PART# upright to the open end of the short guard rails and screw onto the side rail.
Fig 05) repeat Fig 03)
Fig 06) Locate 4 dowels (G) into the top of the lower bunk legs then lift the upper bunk and position it onto the dowels and the lower bed.

Position and screw part (07) with screw F to both sides of the frame as in Fig 07.

Identify two side rails 2 x 04. Rail B has two small screw holes on the outside face towards one end
2. Identify dowels (4 x 4) Place one dowel into the centre hole at the end of each side rail
3. Offer side rails to the bunk ends locating dowel into centre hole of each bunk end.
4. Identify bolt sets (8 x 1, 8 x 2) and barrel nuts (8 x 3). Locate barrel nuts into the 4 holes on the inside of each side rail. Locate bolts with washers through bunk ends into side rails ensuring that the slot on the barrel nut is running parallel to the direction of the length of the rail
5. **Slats:** Place spacer * in between H&Y. Roll out and position slats on the cleats attached to the side rails, tape uppermost. Ensure that the gaps between slats are not more than 75mm or less than 60mm. Screw all slats into position using 28 x 8 screws.

UPPER BED ASSEMBLY

6. Repeat steps 1-3 above, using upper bunk ends D & E.
.**PLEASE NOTE**: Ensure that the end of rail B which has two screw holes connects with bunks end E. Bunk end E can be identified by the fact that in only has 3 holes on one side and 9 on the other.
7. Repeat step 4 as above but **DO NOT TIGHTEN BOLTS**.
8. Identify long safety rails (2 x F and dowels 8 x 4) Locate dowels in the outer two holes of each end of the long safety rails.
9. Insert a barrel nut 3 into the hole at each end of the long safety rails. Offer and locate long safety rails on the same side as side rail C using bolts and washers 1 & 2.
10. **NOW TIGHTEN ALL BOLTS.**
11. Repeat step 5 for upper bunk slats.

12. Identify large dowels 4 x 5 and locate into holes at the top of lower bunks ends. Lift upper bunk onto lower bunk ensuring all four dowels slot into place. Side rails B should be on the same side of the bunk above each other (see diagram).
13. Identify screw plates 4 x 9 and screws 8 x 10. Position screw plates as in diagram.
14. **WARNING - THE MATTRESS MUST NOT COME ABOVE THE MATTRESS LINE ON THE TOP BUNK.**

LADDER ASSEMBLY

15. Locate the rungs into slots of ladder uprights ensuring ends of ladder uprights are uppermost. Screw through ladder uprights into rungs using screws 6 x 6.
16. Identify short safety rails 2 x G and dowels 8 x 4. Locate dowels into outer 2 holes of each end of the short safety rails.
17. Insert a barrel nut 3 into the hole at each end of safety rails. Locate safety rail into upper bunk end as in diagram using bolts and washers 1 x 2.
18. Screw ladder to side rails and safety rails through pre drilled holes using 6 x 7 screws.

MANUFACTURERS WARNING

CHECK THE BUNK REGULARLY FOR STABILITY AND TIGHTEN IF NECESSARY. IF ANY PART SHOULD BECOME DEFECTIVE DO NOT USE SUBSTITUTES - CONTACT YOUR RETAILER FOR THE CORRECT REPLACEMENT PARTS.

CHILDREN MUST NOT BE ALLOWED TO USE THE BUNK AS A CLIMBING FRAME AND THE TOP BED MUST NOT BE USED BY CHILDREN UNDER THE AGE OF SIX. BE AWARE OF DANGER OF YOUNG CHILDREN (UNDER 6) FALLING FROM THE TOP BUNK.

COMPLIANCE TO EN747-1 HAS BEEN MET